Interchangeable Lens Digital Camera
ILCE-7SM3 α7SIII

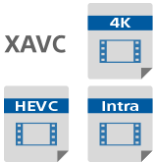

File Format (movie)

You can select the movie file format.

Recordable movie times

Refer to this topic for the shooting duration of movies recordable on the memory card.

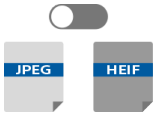

JPEG/HEIF Switch

Switches the file format (JPEG/HEIF) of the still image to be recorded.

FTP Help Guide

Refer to the “FTP Help Guide” when you want to transfer images to an FTP server.

ILCE-7SM3 support information

This website provides basic information about the camera and information regarding compatible lenses and accessories. (Another window will open.)

How to use the “Help Guide”

Before Use

Checking the camera and the supplied items

Memory cards that can be used

Notes on using your camera

- Precautions
- Notes on the battery pack and charging the battery
- Notes on memory card
- Cleaning the image sensor (Sensor Cleaning)

On cleaning

Names of parts

Names of parts

Front side

Rear side

Top side

Sides

Bottom

Basic operations

Touch operations on the monitor

Using the control wheel

Using the multi-selector

Using the mode dial

Using the MENU button

Using the C (custom) buttons

Using the Fn (Function) button

Using the DISP (Display Setting) button

Using the Delete button

Using the AEL button

Using the AF-ON button

Using the front dial and rear dial

Using the keyboard

Basic icons

In-Camera Guide

Preparing the camera/Basic shooting operations

Charging the battery pack

Charging the battery pack using a charger

Inserting/removing the battery pack

Charging the battery pack while it is inserted into the camera

Using the battery charger abroad

Supplying power from a wall outlet (wall socket)

Inserting/removing a memory card

Attaching/removing a lens

Setting language, date and time

Basic shooting operations

- Confirmation before shooting
- Shooting still images (Intelligent Auto)
- Shooting movies

Finding functions from MENU

Using the shooting functions

Contents of this chapter

Selecting a shooting mode

- Intelligent Auto
- Program Auto
- Aperture Priority
- Shutter Priority
- Manual Exposure
- Bulb shooting
- Exposure Ctrl Type
- Auto/Manual Swt. Set.
- Movie: Exposure Mode
- S&Q Motion: Exposure Mode
- Auto Slow Shutter

Focusing

- Selecting the focus method (Focus Mode)
- Selecting the focus area (Focus Area)
- Tracking subject (Tracking function)

Face/Eye AF

- Focusing on human eyes
- Face/Eye Prior. in AF (still image/movie)

- Face/Eye Subject (still image/movie)
- Right/Left Eye Select (still image/movie)
- Face/Eye Frame Disp. (still image/movie)
- Face Memory
- Regist. Faces Priority (still image/movie)

Using the AF functions

- Focus Standard
- Adjusting the focus area settings to the camera's orientation (horizontal/vertical) (Switch V/H AF Area)
- Registering the current focus area (AF Area Registration)
- Deleting a registered AF Area (Del. Regist. AF Area)
- Focus Area Limit (still image/movie)
- Circ. of Focus Point (still image/movie)
- AF Frame Move Amt (still image/movie)
- Focus Area Color (still image/movie)
- AF Area Auto Clear
- AF-C Area Display
- Phase Detect. Area
- AF Tracking Sensitivity
- AF Transition Speed
- AF Subj. Shift Sensitivity
- AF/MF Selector
- AF w/ Shutter
- AF On
- Focus Hold
- Pre-AF
- Priority Set in AF-S
- Priority Set in AF-C
- AF in Focus Mag.
- AF Illuminator
- Aperture Drive in AF

Using the MF functions

- Manual Focus
- Direct manual focus (DMF)
- Auto Magnifier in MF
- Focus Magnifier
- Focus Magnif. Time (still image/movie)
- Initial Focus Mag. (still image)
- Initial Focus Mag. (movie)
- Peaking Display

Adjusting the exposure/metering modes

- Exposure Comp. (still image/movie)
- Histogram display
- Reset EV Comp. (still image/movie)
- Exposure step (still image/movie)
- Exposure Std. Adjust (still image/movie)
- Dial Ev Comp
- D-Range Optimizer (still image/movie)
- Metering Mode (still image/movie)
- Face Priority in Multi Metering (still image/movie)
- Spot Metering Point (still image/movie)
- AE lock
- AEL w/ Shutter
- Zebra Display

Selecting the ISO sensitivity

- ISO (still image/movie)
- ISO Range Limit (still image/movie)
- ISO AUTO Min. SS

White balance

- White Balance (still image/movie)
- Capturing a standard white color to set the white balance (custom white balance)

- Priority Set in AWB (still image/movie)
- Shutter AWB Lock
- Shockless WB

Adding effects to images

- Creative Look (still image/movie)
- Picture Profile (still image/movie)

Shooting with drive modes (continuous shooting/self-timer)

- Drive Mode
- Cont. Shooting
- Self-timer(Single)
- Self-timer(Cont)
- Cont. Bracket
- Single Bracket
- Indicator during bracket shooting
- WB bracket
- DRO Bracket
- Bracket Settings

Interval Shoot Func.

Setting the image quality and recording format

- File Format (still image)
- RAW File Type
- JPEG/HEIF Switch
- JPEG Quality/HEIF Quality
- JPEG Image Size/HEIF Image Size
- Aspect Ratio
- HLG Still Image
- Color Space
- File Format (movie)
- Movie Settings (movie)
- S&Q Settings

- Proxy Settings
- APS-C S35 (Super35mm) Shooting (still image/movie)
- Angle of view

Using touch functions

- Touch Operation
- Touch Sensitivity
- Touch Panel/Pad
- Touch Pad Settings
- Touch Func. in Shooting: Touch Focus
- Touch Func. in Shooting:Touch Tracking

Shutter settings

- Silent Mode Settings (still image/movie)
- Shutter Type
- e-Front Curtain Shut.
- Release w/o Lens (still image/movie)
- Release w/o Card
- Anti-flicker Shoot.

Using the zoom

- The zoom features available with this product
- Clear Image Zoom/Digital Zoom (Zoom)
- Zoom Range (still image/movie)
- Zoom Speed (still image/movie)
- Zoom Speed (Remote commander) (still image/movie)
- About zoom scale
- Zoom Ring Rotate

Using the flash

- Using flash (sold separately)
- Flash Mode
- Flash Comp.
- Exp.comp.set

- Wireless Flash
- Red Eye Reduction
- FEL lock
- External Flash Set.
- Video Light Mode

Reducing blur

- SteadyShot (still image)
- SteadyShot (movie)
- SteadyShot Adjust. (still image/movie)
- SteadyShot focal length (still image/movie)

Lens Compensation (still image/movie)

Noise reduction

- Long Exposure NR
- High ISO NR

Setting the monitor display during shooting

- Auto Review (still image)
- Remain Shoot Display (still image)
- Grid Line Display (still image/movie)
- Grid Line Type (still image/movie)
- Live View Display Set.
- Aperture Preview
- Shot. Result Preview
- Bright Monitoring
- Emph disp dur REC
- Marker Display
- Gamma Display Assist
- Gamma Disp. Assist Typ.

Recording movie audio

- Audio Recording
- Audio Rec Level

Audio Out Timing
Wind Noise Reduct.
Shoe Audio Set.
Audio Level Display
TC/UB settings
TC/UB
TC/UB Disp. Setting
Customizing the camera
Contents of this chapter
Customization features of the camera
Assigning frequently used functions to buttons (Custom Key Setting)
Changing the function of the dial temporarily (My Dial Settings)
Registering and recalling camera settings
Camera Set. Memory
Recall Camera Setting
Memory/Recall Media
Registering shooting settings to a custom key (Reg. Custom Shoot Set)
Registering frequently used functions to the function menu
Fn Menu Settings
Registering frequently used functions to My Menu
Add Item
Sort Item
Delete Item
Delete Page
Delete All
Display From My Menu
Separately adjusting the camera settings for still images and movies
Different Set for Still/Mv
Customizing the functions of the ring/dial
Dial Setup

Av/Tv Rotate
Function Ring(Lens)
Lock Operation Parts

Recording movies by pressing the shutter button

REC w/ Shutter (movie)

Monitor/viewfinder settings

Select Finder/Monitor
DISP (Screen Disp) Set (Monitor/Finder)

Viewing

Contents of this chapter

Viewing images

Selecting which memory card to play back (Select Playback Media)
Playing back still images
Enlarging an image being played back (Enlarge Image)
Enlarge Initial Mag.
Enlarge Initial Position
Rotating recorded images automatically (Display Rotation)
Playing back movies
Volume Settings
4ch Audio Monitoring (movie)
Playing back images using slideshow (Slide Show)
Cont. Play for Interval
Play Speed for Interval

Changing how images are displayed

Playing back images on the image index screen (Image Index)
Switching between still images and movies (View Mode)
Display as Group
Focus Frame Display (playback)

Setting how to jump between images

Select Image Jump Dial

Image Jump Method

Protecting images (Protect)

Adding information to images

Rating

Rating Set(Custom Key)

Rotating an image (Rotate)

Extracting still images from a movie

Photo Capture

JPEG/HEIF Switch (Photo Capture)

Copying images from one memory card to another (Copy)

Deleting images

Deleting multiple selected images (Delete)

Delete confirm.

Viewing images on a TV

Viewing images on a TV using an HDMI cable

Changing the camera settings

Memory card settings

Format

Rec. Media Settings (still image/movie): Prioritize Rec. Media

Rec. Media Settings (still image/movie): Recording Mode

Rec. Media Settings (still image/movie): Auto Switch Media

Select REC Folder

Create New Folder

Recover Image DB (still image/movie)

Display Media Info. (still image/movie)

File settings

File/Folder Settings

File Settings

IPTC Information

Copyright Info

Write Serial Number

Network settings

Ctrl w/ Smartphone

Bluetooth Rmt Ctrl

WPS Push

Access Point Set.

Wi-Fi Frequency Band (models supporting 5 GHz)

Display Wi-Fi Info.

SSID/PW Reset

Bluetooth Settings

Wired LAN (USB-LAN)

Airplane Mode

Edit Device Name

Importing root certification to the camera (Import Root Certificate)

Security(IPsec)

Reset Network Set.

FTP Transfer Func.

Viewfinder/monitor settings

Monitor Brightness

Viewfinder Bright.

Finder Color Temp.

Viewfinder Magnifi.

Finder Frame Rate (still image)

Power settings

Power Save Start Time

Auto Power OFF Temp.

Display Quality

USB settings

USB Connection

USB LUN Setting

USB Power Supply

External output settings

HDMI Resolution

HDMI Output Settings (movie)

HDMI Info. Display

CTRL FOR HDMI

General settings

Language

Area/Date/Time Setting

NTSC/PAL Selector

Audio signals

IR Remote Ctrl

Auto Pixel Mapping

Pixel Mapping

Version

Save/Load Settings

Setting Reset

Functions available with a smartphone

Functions available with a smartphone (Imaging Edge Mobile)

Connecting the camera and a smartphone

Connecting the camera and a smartphone using the QR Code

Connecting the camera and a smartphone using the SSID and password

One-touch connection with NFC

Using a smartphone as a remote commander

Transferring images to a Smartphone

Send to Smartphone

Sending Target (proxy movies)

Connecting while the camera is turned OFF

Cnct. during Power OFF

Reading location information from a smartphone

Location Information

Using a computer

Recommended computer environment

Connecting/disconnecting the camera and a computer

Connecting the camera to a computer

Disconnecting the camera from the computer

Managing and editing images on a computer

Introduction to computer software (Imaging Edge Desktop/Catalyst)

Importing images to the computer

Operating the camera from a computer (PC Remote Function)

Appendix

Audio accessories compatible with the Multi Interface Shoe

Vertical grip

Mount Adaptor

Mount Adaptor

LA-EA3/LA-EA5 Mount Adaptor

LA-EA4 Mount Adaptor

Multi Battery Adaptor Kit

Battery life and number of recordable images

Number of recordable images

Recordable movie times

List of icons on the monitor

List of default setting values

Specifications

Trademarks

License

If you have problems

Troubleshooting

Warning messages

5-021-326-12(1) Copyright 2020 Sony Corporation

Interchangeable Lens Digital Camera
ILCE-7SM3 α7SIII

How to use the “Help Guide”

The “Help Guide” is a “Web Instruction Manual” that has been designed to describe the functions and operating methods of this camera. Use the “Help Guide” to search for any information that you require in order to make full use of the camera.
(The “Help Guide” screens shown on this page are for reference only. They may differ from the actual on-screen display of your model.)

Hint

- The “Instruction Manual” supplied with the camera describes basic operating methods and precautions for use. Please refer to the “Instruction Manual” in combination with this “Help Guide”.

Finding your desired information

Method A: Searching by keyword
Enter a search keyword (“white balance,” “focus area,” etc.), and use the search results to display the description page that you want to view. If you enter two or more keywords by separating them with spaces (blanks), you can search for pages that contain all of those keywords.

Method B: Viewing the table of contents
Select a heading from the table of contents to display the description page.

Screen displayed on a computer

Screen displayed on a smartphone

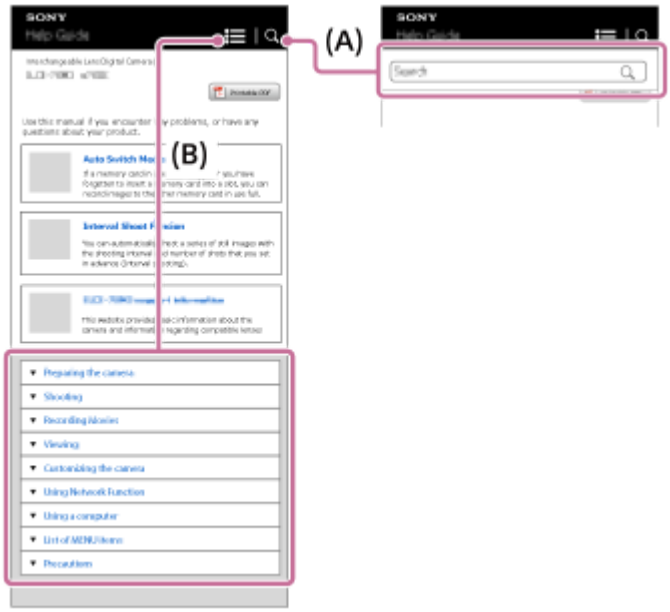

Method C: Finding functions from MENU

If you want to search for information while checking it against the MENU screen of the camera, use the “Finding functions from MENU” page. Select a MENU item from the list to go directly to the description page.

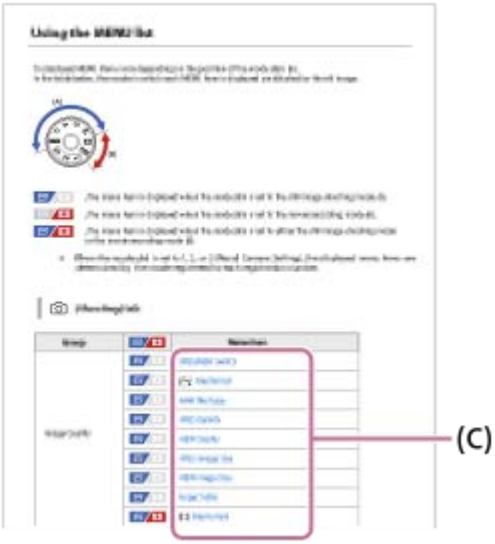

Viewing information about related features

“Related Topic” at the bottom of each page lists sections that contain information related to the description page currently being displayed. For a deeper understanding of the currently displayed page, refer to the listed sections as well.

Printing all the pages of the “Help Guide”

To print all the pages, select the [Printable PDF] button in the upper right corner of the top page. When the PDF file appears, use the printing menu of the browser to print it out.
This function is not available for certain languages.

Printing only the currently displayed page (only on a computer)

To print only the page currently being displayed, select the [Print] button at the top of the page. When the printing screen appears, specify your printer.

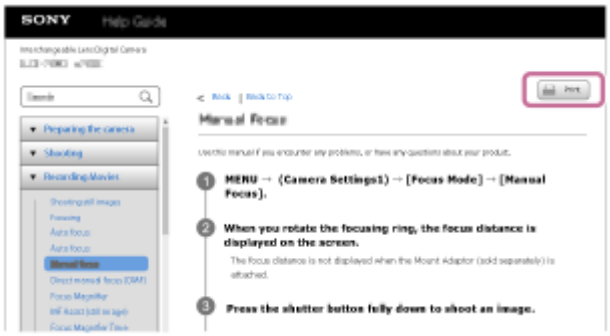

5-021-326-12(1) Copyright 2020 Sony Corporation

Interchangeable Lens Digital Camera
ILCE-7SM3 α7SIII

Checking the camera and the supplied items

The number in parentheses indicates the number of pieces.

- Camera (1)
- Battery Charger (1)

- Power cord (mains lead) (1)*

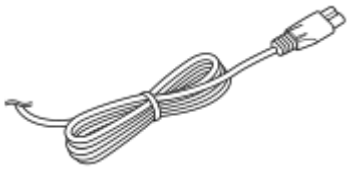

* Multiple power cords may be supplied with your camera. Use the appropriate one that matches your country/region.

- NP-FZ100 Rechargeable Battery Pack (1)

- USB Type-C cable (1)

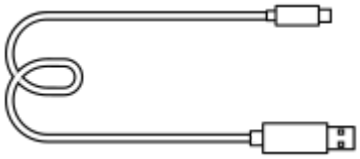

- Shoulder Strap (1)

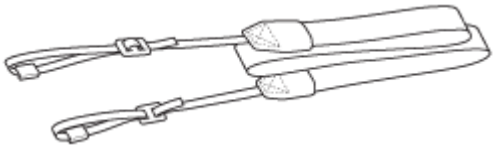

- Body Cap (1) (Attached to the camera)

- Cable Protector (1)

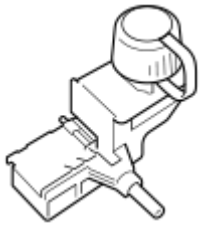

- Shoe Cap (1) (Attached to the camera)
- Eyepiece Cup (1) (Attached to the camera)
- Instruction Manual (1)
- Reference Guide (1)

5-021-326-12(1) Copyright 2020 Sony Corporation

Interchangeable Lens Digital Camera
ILCE-7SM3 α7SIII

Memory cards that can be used

This camera supports CFexpress Type A memory cards and SD memory cards (UHS-I, UHS-II compatible).
When using microSD memory cards with this camera, be sure to use the appropriate adaptor.

For still-image shooting

The following memory cards can be used.

- CFexpress Type A memory cards
- SD/SDHC/SDXC memory cards

For movie recording

Movie recording formats and compatible memory cards are as follows.

File Format	Maximum recordable bit rate	Supported memory card
XAVC S HD	100Mbps	• CFexpress Type A memory card • SDHC/SDXC card (U3 or higher)
XAVC S 4K	280Mbps	• CFexpress Type A memory card (VPG200 or higher) • SDXC V60 or higher
XAVC HS 4K	280Mbps	• CFexpress Type A memory card (VPG200 or higher) • SDXC V60 or higher
XAVC S-I 4K	600Mbps	• CFexpress Type A memory card (VPG200 or higher) • SDXC V90 or higher
XAVC S-I HD	222Mbps	• CFexpress Type A memory card (VPG200 or higher) • SDXC V90 or higher

For S&Q Motion shooting

File formats and compatible memory cards are as follows.
In slow-motion recording, the recording bit rate is higher than usual. You may need a memory card that can be written at a higher speed.

File Format	Maximum recordable bit rate	Supported memory card
XAVC S HD	500Mbps	• CFexpress Type A memory card (VPG200 or higher) • SDXC V60 or higher*1

File Format	Maximum recordable bit rate	Supported memory card
XAVC S 4K	560Mbps	• CFexpress Type A memory card (VPG200 or higher) • SDXC V60 or higher*2
XAVC HS 4K	500Mbps	• CFexpress Type A memory card (VPG200 or higher) • SDXC V60 or higher*2
XAVC S-I 4K	1200Mbps	• CFexpress Type A memory card (VPG200 or higher) • SDXC V90 or higher*3
XAVC S-I HD	890Mbps	• CFexpress Type A memory card (VPG200 or higher) • SDXC V90 or higher*4

*1 When [S&Q Frame Rate] is set to [240fps]/[200fps], you may need an SDXC V90 memory card.
*2 When [S&Q Frame Rate] is set to [120fps]/[100fps], you may need an SDXC V90 memory card.
*3 For slow-motion recording, a CFexpress Type A memory card (VPG200 or higher) is required.
*4 When [S&Q Frame Rate] is set to [240fps]/[200fps], a CFexpress Type A memory card (VPG200 or higher) is required.

Note

- When shooting a proxy movie, a higher-speed memory card may be required.
- CFexpress Type B memory cards cannot be used.
- When an SDHC memory card is used to record an XAVC S movie over extended periods of time, the recorded movies will be divided into files 4 GB in size.
- When recording a movie on memory cards in both the Slot 1 and the Slot 2 with following camera settings, insert two memory cards with the same file system. Movies cannot be recorded simultaneously when using a combination of the exFAT file system and FAT32 file system.

Memory card	File system
CFexpress Type A memory card, SDXC memory card	exFAT
SDHC memory card	FAT32

- Charge the battery pack sufficiently before attempting to recover the database files on the memory card.

Related Topic

- Notes on memory card
- Number of recordable images
- Recordable movie times
- S&Q Settings

5-021-326-12(1) Copyright 2020 Sony Corporation

Interchangeable Lens Digital Camera
ILCE-7SM3 α7SIII

Precautions

Refer also to “Notes on using your camera” in the Instruction Manual (supplied) for this product.

On the data specifications described in this manual

- The data on performance and specifications in this manual are based on an ordinary ambient temperature of 25ºC (77°F), except where otherwise indicated.
- For the battery pack, the data are based on a battery pack that was fully charged until the charge lamp turned off.

On operating temperatures

- Shooting in extremely cold or hot places that exceed this range is not recommended.
- Under high ambient temperatures, the temperature of the camera rises quickly.
- When the temperature of the camera rises, the image quality may deteriorate. It is recommended that you wait until the temperature of the camera drops before continuing to shoot.
- Depending on the camera and battery temperature, the camera may become unable to record movies or the power may turn off automatically to protect the camera. A message will be displayed on the screen before the power turns off or you can no longer record movies. In this case, leave the power off and wait until the camera and battery temperature goes down. If you turn on the power without letting the camera and battery cool sufficiently, the power may turn off again, or you may still be unable to record movies.

Notes on recording for long periods of time or recording 4K movies

Especially during 4K shooting, the recording time may be shorter under low temperature conditions. Warm up the battery pack or replace it with a new battery.

Notes on playing movies on other devices

XAVC HS and XAVC S movies can only be played back on compatible devices.

Notes on recording/playback

- Before you start recording, make a trial recording to make sure that the camera is working correctly.
- Playback of images recorded with your product on other equipment and playback of images recorded or edited with other equipment on your product are not guaranteed.
- Sony can provide no guarantees in the event of failure to record, or loss of or damage to recorded images or audio data, due to a malfunction of the camera or recording media, etc. We recommend backing up important data.
- Once you format the memory card, all the data recorded on the memory card will be deleted and cannot be restored. Before formatting, copy the data to a computer or other device.

Backing up memory cards

Data may be corrupted in the following cases. Be sure to back up the data for protection.

- When the memory card is removed, the USB cable is disconnected, or the product is turned off in the middle of a read or write operation.
- When the memory card is used in locations subject to static electricity or electrical noise.

Database file error

- If you insert a memory card that does not contain an image database file into the product and turn on the power, the product automatically creates an image database file using some of the memory card’s capacity. The process may take a long time and you cannot operate the product until the process is completed.

- If a database file error occurs, export all images to your computer, and then format the memory card using this product.

Do not use/store the product in the following places

- In an extremely hot, cold or humid place
  In places such as in a car parked in the sun, the camera body may become deformed and this may cause a malfunction.
- Storing under direct sunlight or near a heater
  The camera body may become discolored or deformed, and this may cause a malfunction.
- In a location subject to rocking vibration
  It may cause malfunctions and an inability to record data. In addition, the recording media may become unusable, and recorded data may be corrupted.
- Near strong magnetic place
- In sandy or dusty places
  Be careful not to let sand or dust get into the product. This may cause the product to malfunction, and in some cases this malfunction cannot be repaired.
- In places with high humidity
  This may cause the lens to mold.
- In areas where strong radio waves or radiation are being emitted
  Recording and playback may not function correctly.

On moisture condensation

- If the product is brought directly from a cold to a warm location, moisture may condense inside or outside the product. This moisture condensation may cause a malfunction of the product.
- To prevent moisture condensation when you bring the product directly from a cold to a warm location, first put it in a plastic bag and seal it to prevent air from entering. Wait for about an hour until the temperature of the product has reached the ambient temperature.
- If moisture condensation occurs, turn off the product and wait about an hour for the moisture to evaporate. Note that if you attempt to shoot with moisture remaining inside the lens, you will be unable to record clear images.

Precaution on carrying

- Do not hold, hit, or apply excessive force to the following parts, if your camera is equipped with them:
  - The lens part
  - The movable monitor part
  - The movable flash part
  - The movable viewfinder part

- Do not carry the camera with the tripod attached. This may cause the tripod socket hole to break.
- Do not sit down in a chair or other place with the camera in the back pocket of your trousers or skirt, as this may cause malfunction or damage the camera.

Notes on handling the product

- Before you connect the cable to the terminal, be sure to check the orientation of the terminal. Then, insert the cable straight. Do not insert or remove the cable forcefully. This may cause the terminal part to break.
- The camera uses magnetic parts including magnets. Do not bring objects affected by magnetism, including credit cards and floppy disks, close to the camera.
- The recorded image may be different from the image you monitored before recording.

On storing

- For lens-integrated cameras
  Always attach the lens cap when you are not using the camera. (Only for models supplied with a lens cap)
- For interchangeable-lens cameras
  Always attach the lens front cap or body cap when you are not using the camera. To prevent dust or debris from getting inside the camera, remove dust from the body cap before attaching it to the camera.
- If the camera is dirty after use, clean it. Water, sand, dust, salt, etc. left in the camera may cause a malfunction.

Notes on using lenses

- When using the power zoom lens, be careful not to get your fingers or any other objects caught in the lens. (Only for models with a power zoom feature or interchangeable lens cameras)
- If you must place the camera under a light source such as sunlight, attach the lens cap to the camera. (Only for models supplied with a lens cap or interchangeable lens cameras)
- When you shoot with backlighting, keep the sun sufficiently far away from the angle of view. Otherwise, the sunlight may enter the focus inside the camera and cause smoke or fire. Even if the sun is slightly away from the angle of view, it may still cause smoke or fire.
- Do not directly expose the lens to beams such as laser beams. That may damage the image sensor and cause the camera to malfunction.
- If the subject is too close, the image may show any dust or fingerprints on the lens. Wipe the lens with a soft cloth, etc.

Notes on the flash (Only for models with a flash)

- Keep your fingers away from the flash. The light-emitting part may get hot.
- Remove any dirt from the surface of the flash. Dirt on the surface of the flash may emit smoke or burn due to heat generated by the emission of light. If there is dirt/dust, clean it off with a soft cloth.
- Restore the flash to its original position after using it. Make sure that the flash portion is not sticking up. (Only for models with a movable flash)

Notes on the Multi Interface Shoe (Only for models with a Multi Interface Shoe)

- When attaching or detaching accessories such as an external flash to the Multi Interface Shoe, first turn the power to OFF. When attaching the accessory, confirm that it is firmly fastened to the camera.
- Do not use the Multi Interface Shoe with a commercially available flash that applies voltages of 250 V or more or has the opposite polarity of the camera. It may cause a malfunction.

Notes on the viewfinder and flash (Only for models with a viewfinder or a flash)

- Take care that your finger is not in the way when pushing the viewfinder or flash down. (Only for models with a movable viewfinder or a movable flash)
- If water, dust or sand adheres to the viewfinder or flash unit, it may cause a malfunction. (Only for models with a movable viewfinder or a movable flash)

Notes on the viewfinder (Only for models with a viewfinder)

- When shooting with the viewfinder, you may experience symptoms such as eyestrain, fatigue, travel sickness, or nausea. We recommend that you take a break at regular intervals when you are shooting with the viewfinder.
  In case you may feel uncomfortable, refrain from using the viewfinder until your condition recovers, and consult your doctor if necessary.
- Do not forcibly push down the viewfinder when the eyepiece is pulled out. It may cause a malfunction. (Only for models with a movable viewfinder and an eyepiece that can be pulled out)
- If you pan the camera while looking into the viewfinder or move your eyes around, the image in the viewfinder may be distorted or the color of the image may change. This is a characteristic of the lens or display device and is not a malfunction. When you shoot an image, we recommend that you look at the center area of the viewfinder.
- The image may be slightly distorted near the corners of the viewfinder. This is not a malfunction. When you want to see the full composition with all its details, you can also use the monitor.
- If you use the camera in a cold location, the image may have a trailing appearance. This is not a malfunction.

Notes on the monitor

- Do not press against the monitor. The monitor may be discolored and that may cause a malfunction.
- If the monitor has drops of water or other liquids on it, wipe it with a soft cloth. If the monitor stays wet, the surface of the monitor may change or deteriorate. This may cause a malfunction.
- If you use the camera in a cold location, the image may have a trailing appearance. This is not a malfunction.
- When you connect cables to the terminals on the camera, the rotating range of the monitor may become limited.

Notes on the image sensor

If you point the camera at an extremely strong light source while shooting images with a low ISO sensitivity, highlighted areas in the images may be recorded as black areas.

On image data compatibility

This product conforms with DCF (Design rule for Camera File system) universal standard established by JEITA (Japan Electronics and Information Technology Industries Association).

Services and software provided by other companies

Network services, content, and the [operating system and] software of this Product may be subject to individual terms and conditions and changed, interrupted or discontinued at any time and may require fees, registration and credit card information.

Notes on connecting to the internet

To connect the camera to a network, connect it through a router or a LAN port with the same function. Failure to connect in this manner may result in security issues.

Optional accessories

- It is recommended that you use genuine Sony accessories.
- Some Sony accessories are only available in certain countries and regions.

5-021-326-12(1) Copyright 2020 Sony Corporation

Interchangeable Lens Digital Camera
ILCE-7SM3 α7SIII

Notes on the battery pack and charging the battery

Notes on using the battery pack

- Be sure to use only genuine Sony brand battery packs.
- The correct remaining battery indicator may not be displayed under some operating or environmental conditions.
- Do not expose the battery pack to water. The battery pack is not water-resistant.
- Do not leave the battery pack in extremely hot places, such as in a car or under direct sunlight.

Notes on charging the battery pack

- Charge the battery pack (supplied) before using the product for the first time.
- The charged battery pack will discharge little by little even if you do not use it. Charge the battery pack each time before you use the product so that you do not miss any opportunities to shoot images.
- Do not charge battery packs except battery packs specified for this product. Doing so can result in leaks, overheating, explosions, electric shocks, burns, or injuries.
- When you use a completely new battery pack or a battery pack that has not been used for a long time, the charge lamp (CHARGE) may flash quickly when the battery is charged. If this happens, remove the battery pack and then re-insert it to recharge.
- We recommend charging the battery pack in an ambient temperature of between 10 °C and 30 °C (50 °F and 86 °F). The battery pack may not be correctly charged in temperatures outside this range.
- Operation cannot be guaranteed with all external power supplies.
- After charging is finished, disconnect the charger from the wall outlet (wall socket) if charging with a charger, or disconnect the USB cable from the camera if charging the battery pack while it is inserted into the camera. Not doing so may result in a shorter battery life.
- Do not continuously or repeatedly charge the battery pack without using it if it is already fully charged or close to fully charged. Doing so may cause a deterioration in battery performance.
- If the product's charge lamp flashes while charging, remove the battery pack being charged, and then insert the same battery pack firmly back into the product. If the charge lamp flashes again, this may indicate a faulty battery or that a battery pack other than the specified type has been inserted. Check that the battery pack is the specified type. If the battery pack is the specified type, remove the battery pack, replace it with a new or different one and check that the newly inserted battery is charging correctly. If the newly inserted battery is charging correctly, the previously inserted battery may be faulty.

Remaining battery indicator

- The remaining battery indicator appears on the screen.

A: Battery level high
B: Battery exhausted

- It takes about one minute for the correct remaining battery indicator to appear.
- The correct remaining battery indicator may not be displayed under some operating or environmental conditions.
- If the remaining battery indicator does not appear on the screen, press the DISP (Display Setting) button to display it.

Effective use of the battery pack

- Battery performance decreases in low temperature environments. So in cold places, the operational time of the battery pack is shorter. To ensure longer battery pack use, we recommend putting the battery pack in your pocket

close to your body to warm it up, and insert it in the product immediately before you start shooting. If there are any metal objects such as keys in your pocket, be careful of causing a short-circuit.
- The battery pack will run down quickly if you use the flash or continuous shooting function frequently, turn the power on/off frequently, or set the monitor very bright.
- We recommend preparing spare battery packs and taking trial shots before taking the actual shots.
- If the battery terminal is dirty, you may not be able to turn on the product or the battery pack may not be properly charged. In that case, clean the battery by lightly wiping off any dust using a soft cloth or a cotton swab.

How to store the battery pack

To maintain the battery pack’s function, charge the battery pack and then fully discharge it in the camera at least once a year before storing it. Store the battery in a cool, dry place after removing it from the camera.

On battery life

- The battery life is limited. If you use the same battery repeatedly, or use the same battery for a long period, the battery capacity decreases gradually. If the available time of the battery is shortened significantly, it is probably time to replace the battery pack with a new one.
- The battery life varies according to how the battery pack is stored and the operating conditions and environment in which each battery pack is used.

5-021-326-12(1) Copyright 2020 Sony Corporation

Interchangeable Lens Digital Camera
ILCE-7SM3 α7SIII

Notes on memory card

- If [!] (overheating warning icon) is displayed on the monitor, do not remove the memory card from the camera right away. Instead, wait for a while after turning off the camera, and then remove the memory card. If you touch the memory card while it is hot, you may drop it and the memory card may be damaged. Be careful when removing the memory card.
- If you repeatedly shoot and delete images for a long time, fragmentation of data in a file in the memory card may occur, and movie recording may be interrupted in the middle of shooting. If this happens, save your images to a computer or other storage location, then execute [Format] using this camera.
- Do not remove the battery pack or the memory card, disconnect the USB cable, or turn the camera off while the access lamp is lit up. This may cause the data on the memory card to become damaged.
- Be sure to back up the data for protection.
- Not all memory cards are guaranteed to operate correctly.
- Images recorded on an SDXC/CFexpress Type A memory card cannot be imported to or played on computers or AV devices not compatible with exFAT when connected using a USB cable. Make sure that the device is compatible with exFAT before connecting it to the camera. If you connect your camera to an incompatible device, you may be prompted to format the card. Never format the card in response to this prompt, as doing so will erase all data on the card.
  (exFAT is the file system used on SDXC memory cards or CFexpress Type A memory cards.)
- Do not expose the memory card to water.
- Do not strike, bend or drop the memory card.
- Do not use or store the memory card under the following conditions:
  - High temperature locations such as in a car parked under the sun
  - Locations exposed to direct sunlight
  - Humid locations or locations with corrosive substances present
- If the memory card is used near areas with strong magnetization, or used in locations subject to static electricity or electrical noise, the data on the memory card may become damaged.
- Do not touch the terminal section of the memory card with your hand or a metal object.
- Do not leave the memory card within the reach of small children. They might accidentally swallow it.
- Do not disassemble or modify the memory card.
- The memory card may be hot just after it has been used for a long time. Be careful when you handle it.
- Memory card formatted with a computer is not guaranteed to operate with the product. Be sure to format the memory card using this product.
- Data read/write speeds differ depending on the combination of the memory card and the equipment used.
- Do not press down hard when writing in the memo space on the memory card.
- Do not attach a label on the memory card itself nor on a memory card adaptor. You may not be able to remove the memory card.
- If the write-protect switch or delete-protect switch of an SD memory card is set to the LOCK position, you cannot record or delete images. In this case, set the switch to the record position.
- To use a microSD memory card with this product:
  - Be sure to insert the memory card into a dedicated adaptor. If you insert a memory card into the product without a memory card adaptor, you might not be able to remove it from the product.
  - When inserting a memory card into a memory card adaptor, be sure that the memory card is inserted in the correct direction and then insert it as far as it will go. If the card is not inserted properly, it may result in a malfunction.

Related Topic

- Format

5-021-326-12(1) Copyright 2020 Sony Corporation

Interchangeable Lens Digital Camera
ILCE-7SM3 α7SIII

Cleaning the image sensor (Sensor Cleaning)

If dust or debris gets inside the camera and adheres to the surface of the image sensor (the part that converts the light to an electric signal), it may appear as dark spots on the image, depending on the shooting environment. If this happens, clean the image sensor quickly by following the steps below.

1. **Confirm that the battery has been charged sufficiently.**
2. **MENU → (Setup) → [Setup Option] → [Sensor Cleaning] → [Enter].**

   The image sensor vibrates a little to shake off the dust.
3. **Turn off the camera following the instructions on the screen.**
4. **Detach the lens.**
5. **Use a commercially available blower to clean the image sensor surface and the surrounding area.**
   - Hold the camera slightly face downward so that the dust falls out.

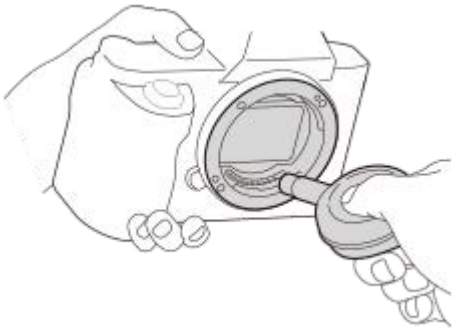

6. **Attach the lens.**

Hint

- For how to check the amount of dust on the image sensor, and for further details on cleaning methods, please refer to the following URL.
  https://support.d-imaging.sony.co.jp/www/support/ilc/sensor/index.php

Note

- Make sure that the remaining battery level is (3 remaining battery icons) or more, before performing the cleaning.
- Do not use a spray type blower as it may scatter water droplets inside the camera body.
- Do not put the tip of a blower into the cavity beyond the lens mount area, so that the tip of the blower does not touch the image sensor.
- When cleaning the image sensor with a blower, do not blow too hard. If you blow the sensor too hard, the inside of the product may be damaged.
- If the dust remains even after you cleaned the product as described, consult the service facility.

- During cleaning, the image sensor emits a vibrating noise. This is not a malfunction.
- Cleaning may be performed automatically when the power is turned off.

Related Topic

- Attaching/removing a lens

5-021-326-12(1) Copyright 2020 Sony Corporation

On cleaning

Cleaning the lens

- Do not use a cleaning solution containing organic solvents, such as thinner, or benzine.
- When cleaning the lens surface, remove dust with a commercially available blower. In case of dust that sticks to the surface, wipe it off with a soft cloth or tissue paper slightly moistened with lens cleaning solution. Wipe in a spiral pattern from the center to the outside. Do not spray lens cleaning solution directly onto the lens surface.

Cleaning the camera body

Do not touch the parts of the product inside the lens mount, such as a lens signal contact. To clean inside the lens mount, use a commercially available blower* to blow any dust off.

* Do not use a spray-type blower as doing so may cause a malfunction.

Cleaning the product surface

Clean the product surface with a soft cloth slightly moistened with water, then wipe the surface with a dry cloth. To prevent damage to the finish or casing:

- Do not expose the product to chemical products such as thinner, benzine, alcohol, disposable cloths, insect repellent, sunscreen or insecticide.
- Do not touch the product with any of the above on your hand.
- Do not leave the product in contact with rubber or vinyl for a long time.

Cleaning the monitor

- If you wipe the monitor firmly using tissue paper, etc., the monitor may be scratched.
- If the monitor becomes dirty with fingerprints or dust, gently remove the dust from the surface, and then clean the monitor using soft cloth, etc.

5-021-326-12(1) Copyright 2020 Sony Corporation

Interchangeable Lens Digital Camera
ILCE-7SM3 α7SIII

Front side

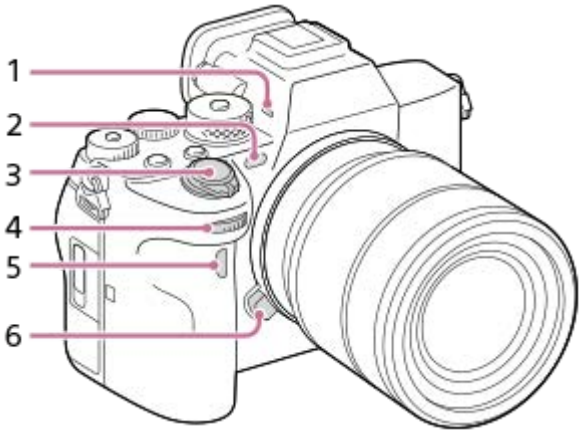

1. Microphone
   Do not cover this part during movie recording. Doing so may cause noise or lower the volume.

2. AF illuminator/Self-timer lamp/Visible light and IR sensor
   Do not cover this part during shooting.

3. ON/OFF (Power) switch/Shutter button
4. Front dial
   You can quickly adjust the settings for each shooting mode.

5. Infrared remote sensor
6. Lens release button
7. Mounting index
8. Image sensor*
9. Mount
10. Lens contacts*

* Do not directly touch these parts.

5-021-326-12(1) Copyright 2020 Sony Corporation

Interchangeable Lens Digital Camera
ILCE-7SM3 α7SIII

Rear side

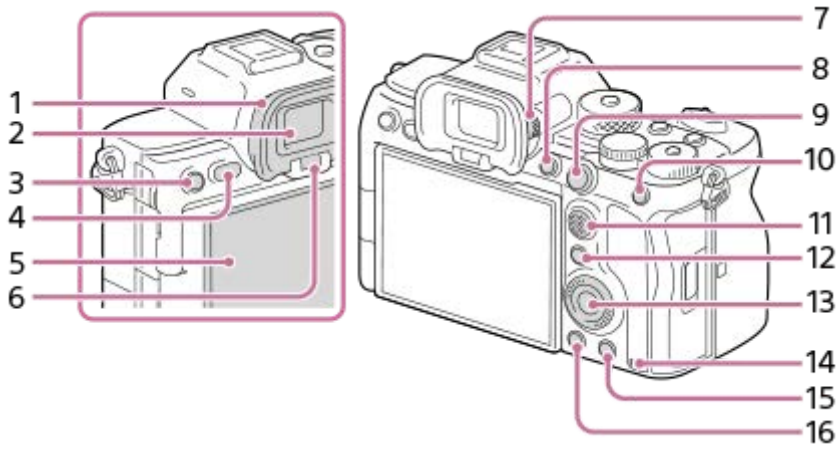

1. Eyepiece Cup

To remove the eyepiece cup

Push the grips at the bottom of the eyepiece cup to the left and right and lift up the cup.

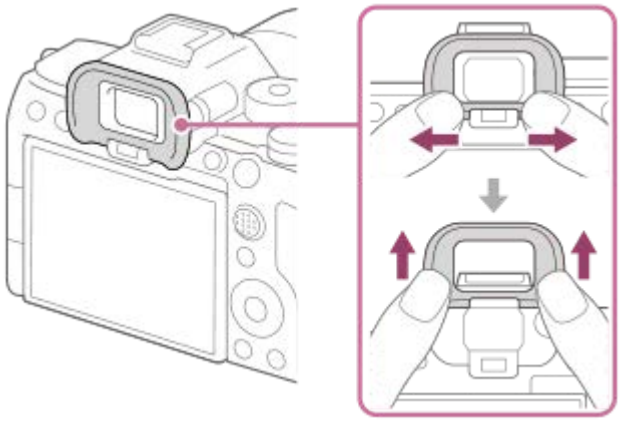

2. Viewfinder
3. For shooting: C3 button (Custom button 3)
   For viewing: (Protect) button
4. MENU button
5. Monitor (For touch operation: Touch panel/Touch pad)
   You can adjust the monitor to an easily viewable angle and shoot from any position.

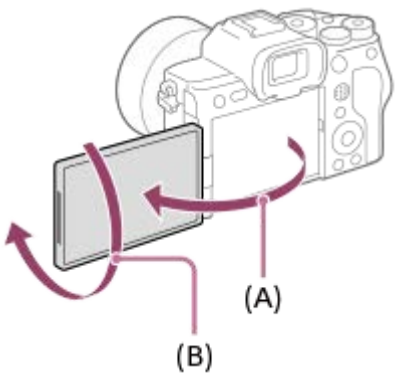

(A): Approx. 176°
(B): Approx. 270°
Do not apply excessive force when opening, closing, or rotating the monitor. Doing so may cause a malfunction.

6. Eye sensor
7. Diopter-adjustment dial
   Adjust the diopter-adjustment dial according to your eyesight until the display appears clearly in the viewfinder. If it is hard to operate the diopter-adjustment dial, remove the eyepiece cup before operating the dial.

8. C1 button (Custom button 1)
9. For shooting: AF-ON (AF On) button
   For viewing: (Enlarge) button
10. For shooting: AEL button
    [AEL hold] is assigned to the AEL button in the default settings.
    For viewing: (Image index) button
11. Multi-selector
12. For shooting: Fn (Function) button
    For viewing: (Send to Smartphone) button
    You can display the screen for [Send to Smartphone] by pressing this button.
13. Control wheel
14. Access lamp
15. For shooting: C4 button (Custom button 4)
    For viewing: (Delete) button
16. (Playback) button

5-021-326-12(1) Copyright 2020 Sony Corporation

Interchangeable Lens Digital Camera
ILCE-7SM3 α7SIII

Top side

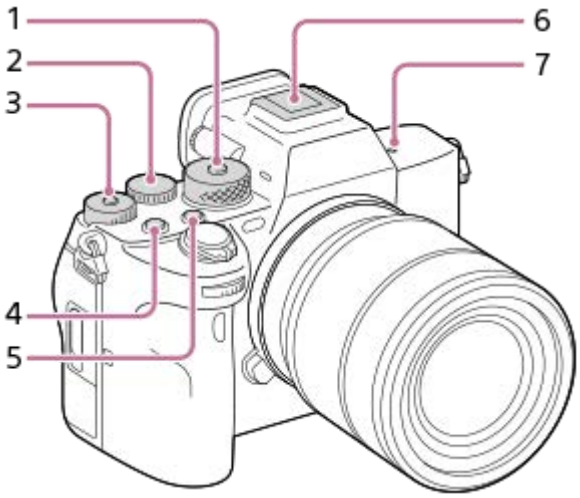

1. Mode dial
   The mode dial is unlocked while you hold down the unlock button at the center.

2. Rear dial
   You can quickly adjust the settings for each shooting mode.

3. Exposure compensation dial
   Pressing the lock button at the center switches the exposure compensation dial between the locked and unlocked status. The dial is unlocked when the lock button is popped up and the white line is visible.

4. MOVIE (Movie) button
5. C2 button (Custom button 2)
6. Multi Interface Shoe*
   Some accessories may not go in all the way and protrude backward from the Multi interface shoe. However, when the accessory reaches the front end of the shoe, the connection is completed.

7. ⊖ Image sensor position mark
   - The image sensor is the sensor that converts light into an electric signal. The position of the image sensor is indicated by ⊖ (Image sensor position mark). When you measure the exact distance between the camera and the subject, refer to the position of the horizontal line.

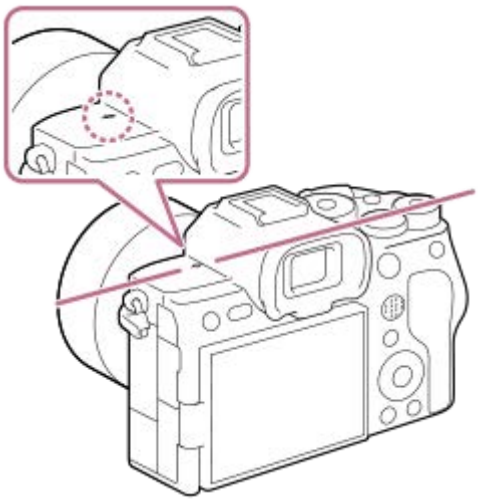

- If the subject is closer than the minimum shooting distance of the lens, the focus cannot be confirmed. Make sure you put enough distance between the subject and the camera.

* For details on compatible accessories for the Multi Interface Shoe, visit the Sony website, or consult your Sony dealer or local authorized Sony service facility.
Accessories for the Accessory Shoe can also be used. Operations with other manufacturers' accessories are not guaranteed.

5-021-326-12(1) Copyright 2020 Sony Corporation

Interchangeable Lens Digital Camera
ILCE-7SM3 α7SIII

Sides

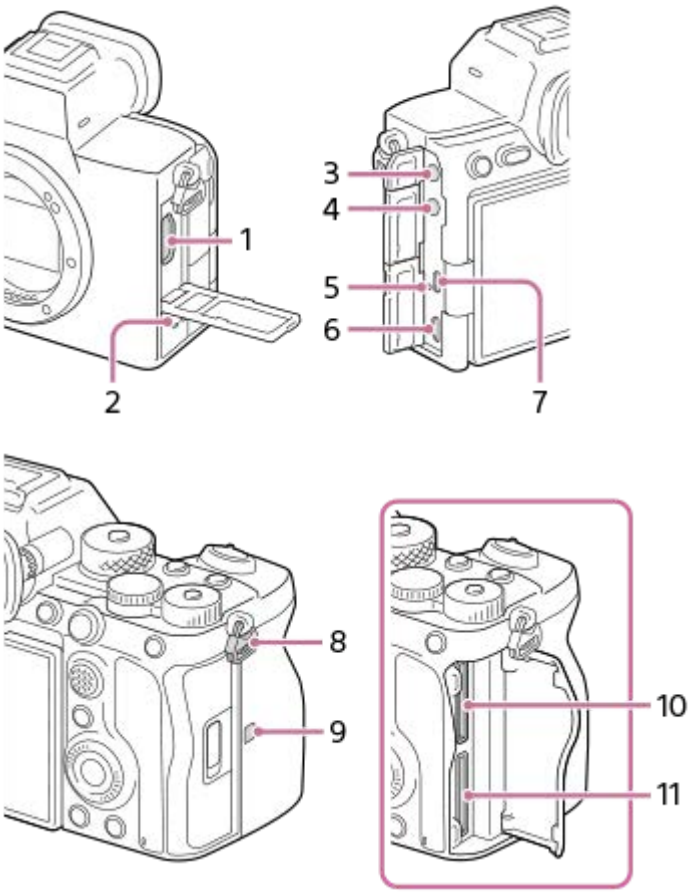

1. HDMI type A jack
2. Speaker
3. (Microphone) jack
   When an external microphone is connected, the built-in microphone turns off automatically. When the external microphone is a plugin-power type, the power of the microphone is supplied by the camera.

4. (Headphones) jack
5. Charge lamp
6. Multi/Micro USB Terminal*
   This terminal supports Micro USB-compatible devices.

7. USB Type-C terminal
8. Hooks for shoulder strap
   Attach both ends of the strap onto the camera.

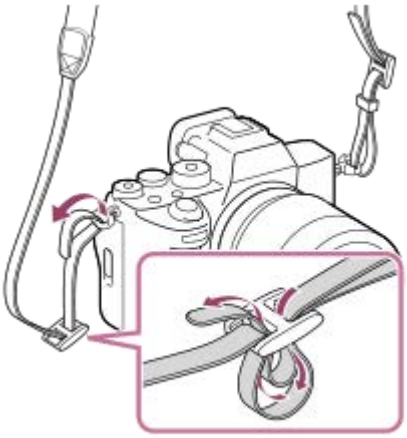

9. (N-Mark)
   - This mark indicates the touch point for connecting the camera and an NFC-enabled Smartphone.

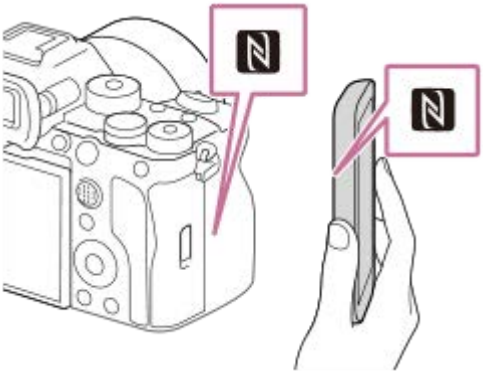

   - NFC (Near Field Communication) is an international standard of short-range wireless communication technology.

10. SLOT 1 (Memory card slot 1)
11. SLOT 2 (Memory card slot 2)

* For details on compatible accessories for the Multi/Micro USB Terminal, visit the Sony website, or consult your Sony dealer or local authorized Sony service facility.

Notes on USB terminals

You can use either the USB Type-C terminal or the Multi/Micro USB Terminal for USB communications. However, you cannot conduct USB communications with both terminals simultaneously. Use the USB Type-C terminal to supply power and charge the battery pack.

- You can use accessories for the Multi/Micro USB Terminal, such as a remote commander (sold separately), while supplying power or performing PC Remote shooting using the USB Type-C terminal.

Notes on the terminal cover

Ensure that the terminal cover is closed before use.

Notes on the cable protector

Use the cable protector to prevent a cable from being disconnected when shooting images with the cable connected.

To attach the cable protector

1. Open the HDMI terminal cover, headphone terminal cover, and USB terminal cover.
2. Fit the hook **(A)** of the cable protector into the notch **(B)** below the Multi/Micro USB terminal, and press down so that it does not come off, and then attach it so that it covers the terminal surface of the unit.
3. Push the attachment screw **(C)** in and turn it to secure the cable protector.

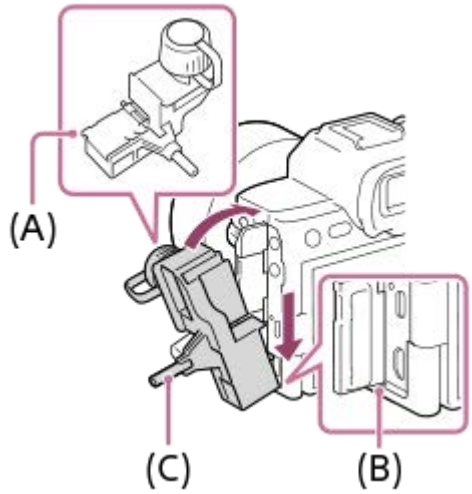

4. Insert the cable into one of the jacks.
5. Insert the cable into the holding part and then secure the cable with the fixing dial **(D)**.

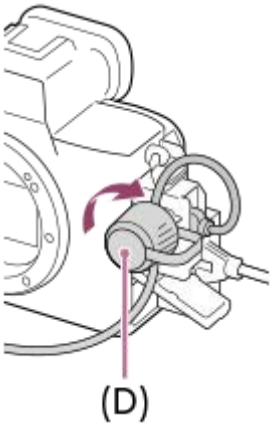

To remove the cable protector

Loosen the attachment screw, and then remove the cable protector.

5-021-326-12(1) Copyright 2020 Sony Corporation

Interchangeable Lens Digital Camera
ILCE-7SM3 α7SIII

Bottom

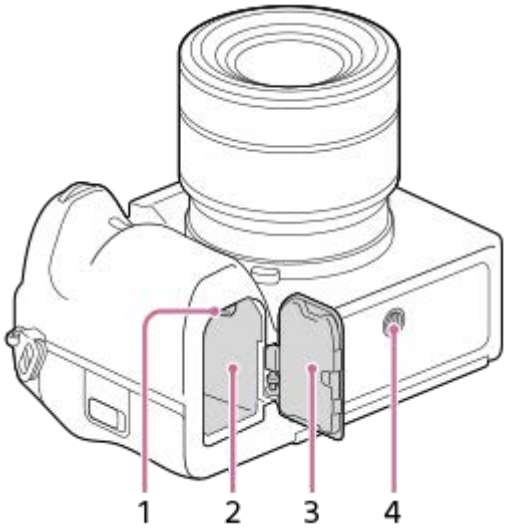

1. Lock lever
2. Battery insertion slot
3. Battery cover
   When attaching an accessory such as a vertical grip (sold separately), remove the battery cover.

To remove the battery cover

Pull the battery cover release lever **(A)** in the direction of the arrow, and then remove the battery cover.

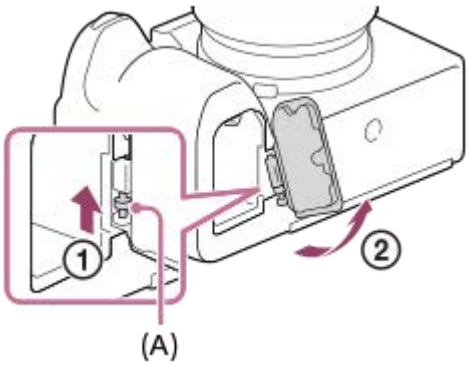

To attach the battery cover

Insert the shaft on one side of the battery cover into the attachment site, and then push in the battery cover by attaching the shaft on the opposite side.

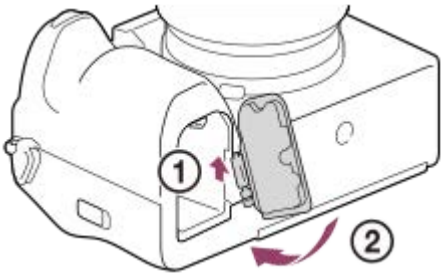

4. Tripod socket hole
   Supports 1/4-20 UNC screws
   Use a tripod with a screw less than 5.5 mm (7/32 inches) long. Otherwise, you cannot firmly secure the camera, and damage to the camera may occur.

5-021-326-12(1) Copyright 2020 Sony Corporation

Interchangeable Lens Digital Camera
ILCE-7SM3 α7SIII

Touch operations on the monitor

By touching the monitor, you can intuitively perform operations such as focusing on the shooting screen and operating the playback screen.

Touch operations (on the shooting screen)

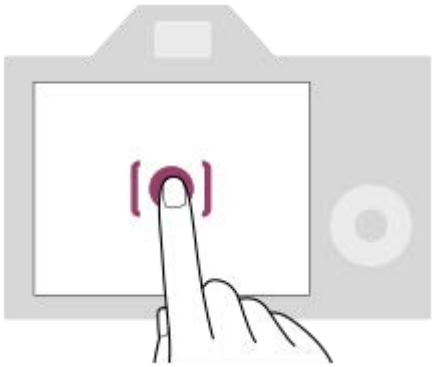

Touch the monitor to specify where to focus (Touch Focus).
Touch a subject on the monitor to use the touch tracking function (Touch Tracking).

Touch operations (on the playback screen)

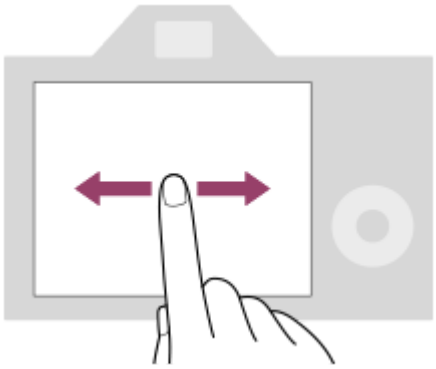

During single-image playback, swipe the screen to the left or right to move to the previous or next image.

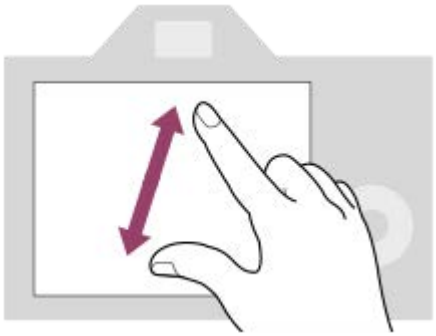

During single-image playback, you can enlarge or reduce the displayed image by moving apart or bringing together two fingers on the screen (pinch-out/pinch-in).

- You can also double-tap the monitor to enlarge a still image or exit the enlarged image.
- During movie playback, you can start or pause playback using touch operations.

Related Topic

- Touch Operation
- Touch Sensitivity
- Touch Panel/Pad
- Touch Func. in Shooting: Touch Focus
- Touch Func. in Shooting:Touch Tracking

5-021-326-12(1) Copyright 2020 Sony Corporation

Interchangeable Lens Digital Camera
ILCE-7SM3 α7SIII

Using the control wheel

On the menu screen or the screen displayed by pressing the Fn button, you can move the selection frame by turning the control wheel or by pressing the top/bottom/left/right side of the control wheel. Your selection is confirmed when you press the center of the control wheel.

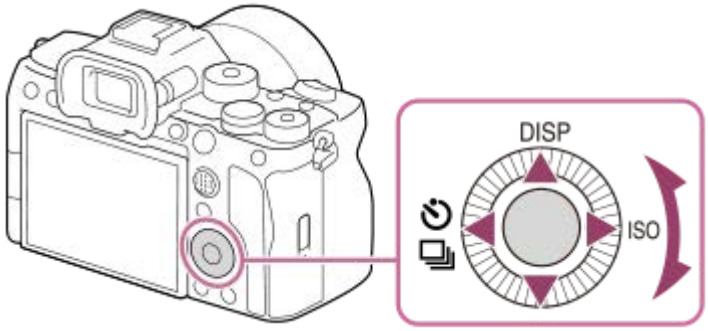

- The DISP (Display Setting), / (Drive Mode), and ISO (ISO) functions are assigned to the top/left/right side of the control wheel. In addition, you can assign selected functions to the left/right/bottom side and the center of the control wheel, and to the rotation of the control wheel.
- During playback, you can display the next/previous image by pressing the right/left side of the control wheel or by turning the control wheel.

Related Topic

- Assigning frequently used functions to buttons (Custom Key Setting)
- Changing the function of the dial temporarily (My Dial Settings)

5-021-326-12(1) Copyright 2020 Sony Corporation

Interchangeable Lens Digital Camera
ILCE-7SM3 α7SIII

Using the multi-selector

You can move the focus area by pushing the multi-selector up/down/left/right. You can also assign a function to be activated when you press the center of the multi-selector.

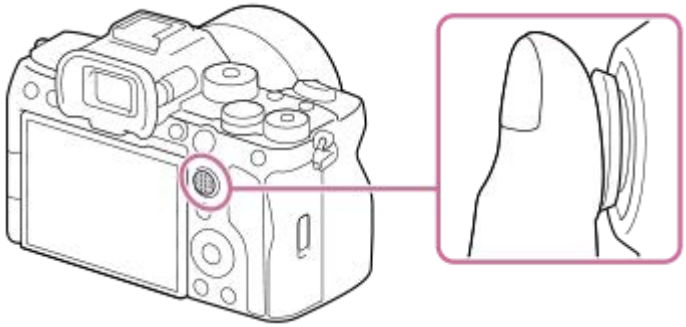

- Put your finger right on top of the multi-selector to manipulate it more precisely.
- You can move the focus area when [Focus Area] is set to the following parameters:
  - [Zone]
  - [Spot: S] / [Spot: M] / [Spot: L]
  - [Expand Spot]
  - [Tracking: Zone]
  - [Tracking: Spot S] / [Tracking: Spot M] / [Tracking: Spot L]
  - [Tracking: Expand Spot]
- The [Focus Standard] function is assigned to the center of the multi-selector in the default settings.

Related Topic

- Selecting the focus area (Focus Area)
- Focus Standard

5-021-326-12(1) Copyright 2020 Sony Corporation

Interchangeable Lens Digital Camera
ILCE-7SM3 α7SIII

Using the mode dial

Use the mode dial to select a shooting mode according to the subject and purpose of shooting.

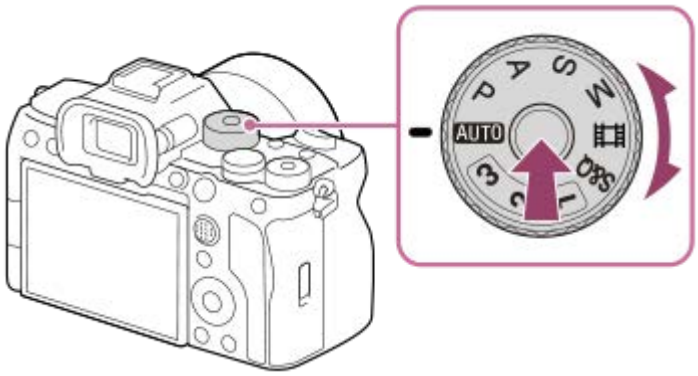

- Turn the mode dial while pressing the mode dial lock release button in the center of the mode dial.

Shooting mode details

The modes on the mode dial are divided into still image shooting modes, movie recording modes, and registration recall modes.

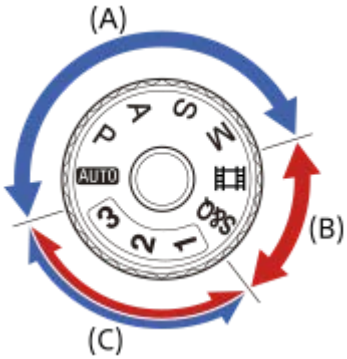

(A) Still image shooting modes
(B) Movie recording modes
(C) Registration recall modes

Hint

- The menu items displayed vary depending on the mode dial setting.

(A) Still image shooting modes

The shooting mode you select determines how to adjust the aperture (F value) and shutter speed.

Mode dial	Shooting mode	Description
AUTO (Auto)	Intelligent Auto	The camera shoots with automatic scene recognition.
P	Program Auto	Allows you to shoot with the exposure adjusted automatically (both the shutter speed and the aperture value). You can set shooting functions such as [ISO].

Mode dial	Shooting mode	Description
A	Aperture Priority	The aperture value is given priority and the shutter speed is adjusted automatically. Select this when you want to blur the background or focus on the entire screen.
S	Shutter Priority	The shutter speed is given priority and the aperture value is adjusted automatically. Select this when you want to shoot a fast-moving subject without blurring, or when you want to shoot a water or light trail.
M	Manual Exposure	Manually adjust both the aperture value and shutter speed. You can shoot with your favorite exposure.

(B) Movie recording modes

Mode dial	Shooting mode	Description
(Movie)	Movie	You can set the exposure mode for movie shooting.
S&Q	S&Q Motion	You can set the exposure mode for S&Q Motion shooting.

The method for setting the exposure (shutter speed and aperture) in the movie recording modes depends on the MENU → (Shooting) → [Shooting Mode] → [Exposure Ctrl Type] setting.
When [Exposure Ctrl Type] is set to [P/A/S/M Mode]:
MENU → (Shooting) → [Shooting Mode] → [Exposure Mode] or [S&Q Exposure Mode] → Select the desired exposure mode from among P/A/S/M.
When [Exposure Ctrl Type] is set to [Flexible Exp. Mode]:
You can use the custom button to which [Av Auto/Manual Switch] or [Tv Auto/Manual Switch] under [Auto/Manual Swt. Set.] is assigned to switch between the automatic setting and manual setting for each aperture value and shutter speed. If you select the manual setting, turn the front/rear dial and set the desired value.

(C) Registration recall modes

Mode dial	Shooting mode	Description
1 / **2** / **3**	MR Recall Camera Setting	You can call up frequently used modes and numerical value settings that have been registered* in advance then shoot the images. * In [MR Camera Set. Memory], you can register various shooting settings, such as the exposure mode (P / A / S / M), aperture (F value), and shutter speed.

Related Topic

- Intelligent Auto
- Program Auto
- Aperture Priority
- Shutter Priority
- Manual Exposure
- Exposure Ctrl Type
- Movie: Exposure Mode
- S&Q Motion: Exposure Mode
- Recall Camera Setting
- Camera Set. Memory
- Using the MENU button

5-021-326-12(1) Copyright 2020 Sony Corporation

Interchangeable Lens Digital Camera
ILCE-7SM3 α7SIII

Using the MENU button

The menu screen is displayed by pressing the MENU button. You can change settings related to all of the camera operations including shooting and playback, or you can execute a function from the menu screen.

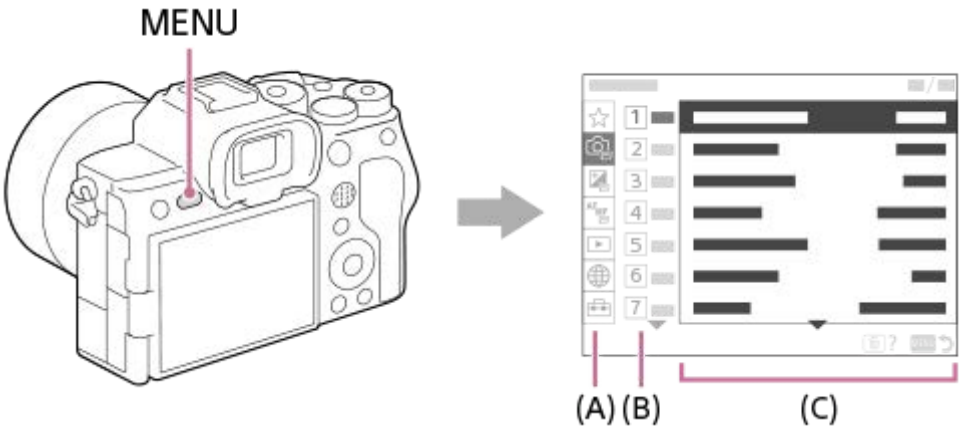

(A) Menu tab

Menu tabs are categorized by usage scenario, such as shooting, playback, network settings, etc.

(B) Menu group

In each tab, menu items are grouped by function.
The number assigned to the group is the serial number in the tab. Refer to the number to determine the location of the group in use.

(C) Menu item

Select the function you want to set or execute.

Hint

- The name of the selected tab or group is displayed at the top of the screen.
- When [Touch Operation] is set to [On], touch operations on the menu screen are possible.

Basic operations on the menu screen

1. Press the MENU button to display the menu screen.
2. Move within the menu tree and find the desired menu item by pressing the top/bottom/left/right side of the control wheel.
   - The displayed menu items differ between the still image shooting modes and movie recording modes.

(A) Menu tabs
(B) Menu groups
(C) Menu items

3. Press the center of the control wheel to select the menu item.
   The setting screen or execution screen for the selected item will appear on the monitor.

4. Select a parameter or execute the function.
   - If you want to cancel changing the parameter, press the MENU button and go back to the previous screen.

5. Press the MENU button to exit the menu screen.
   You will return to the shooting screen or playback screen.

Hint

- You can display the menu screen by assigning the [MENU] function to a custom key using [Custom Key Setting] or [Custom Key Setting], and then pressing that key.

Relationship between the mode dial and menu screen

The menu groups and menu items displayed in the [Shooting], [Exposure/Color], and [Focus] tabs vary depending on the mode dial setting.

Still image shooting modes (AUTO/P/A/S/M)

- Menu items for shooting still images are displayed.*

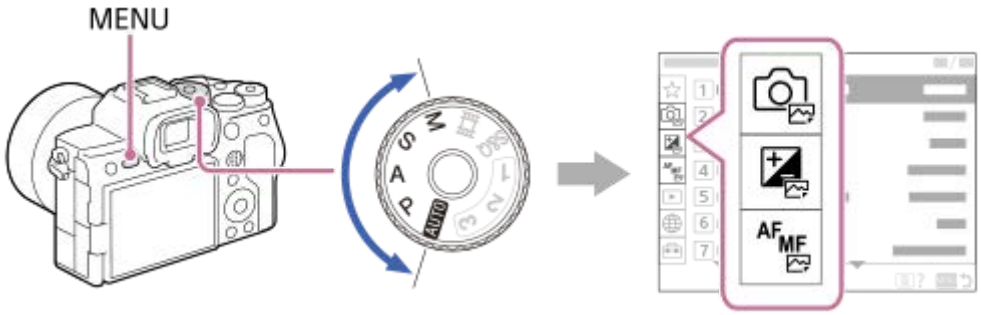

* Since you can record movies with the MOVIE (Movie) button even in the still image shooting mode, some basic movie menu items are also displayed.

Movie recording modes (/S&Q)

- Menu items for recording movies are displayed.

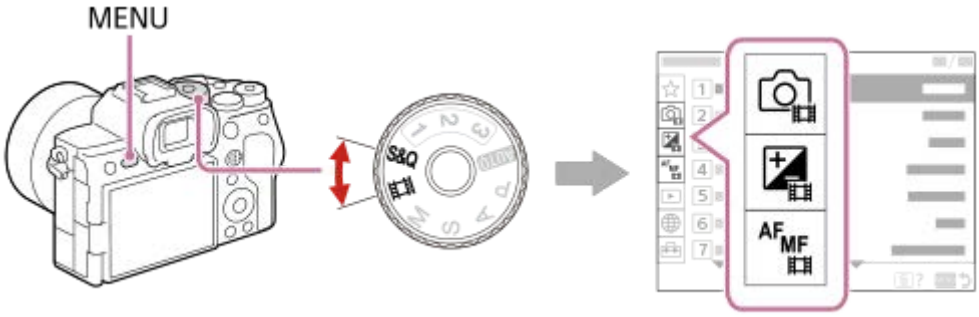

Icons used in the “Help Guide”

: Menu items displayed in the still image shooting modes (AUTO/P/A/S/M)
: Menu items displayed in the movie recording modes (Movie/S&Q)
: Menu items displayed in both the still image shooting modes and movie recording modes

---

Related Topic

- Finding functions from MENU
- Add Item
- Display From My Menu
- Assigning frequently used functions to buttons (Custom Key Setting)
- Using the mode dial

5-021-326-12(1) Copyright 2020 Sony Corporation

Interchangeable Lens Digital Camera
ILCE-7SM3 α7SIII

Using the C (custom) buttons

If you assign frequently used functions to the custom buttons (C1 to C4) in advance, you can quickly call up those functions simply by pressing the button during shooting or playback.
Recommended functions are assigned to the custom buttons by default.

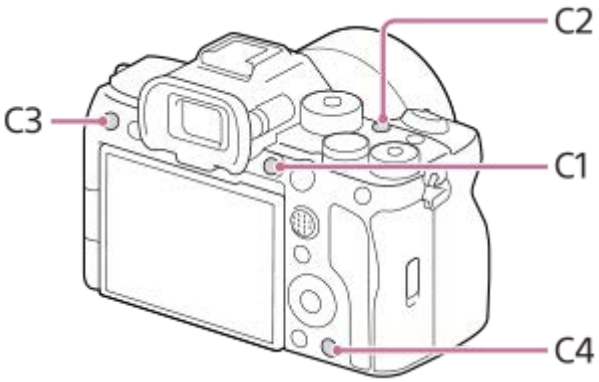

To check/change the functions of the custom buttons

You can confirm the function currently assigned to each custom button via the following procedure.
MENU → (Setup) → [Operation Customize] → [Custom Key Setting], [Custom Key Setting] or [Custom Key Setting].
If you want to change the function of the custom button, press the center of the control wheel while the custom button is selected. The functions that can be assigned to that button will appear. Select your desired function.

Related Topic

- Assigning frequently used functions to buttons (Custom Key Setting)

5-021-326-12(1) Copyright 2020 Sony Corporation

Interchangeable Lens Digital Camera
ILCE-7SM3 α7SIII

Using the Fn (Function) button

If you press the Fn (function) button during shooting, a menu (function menu) containing frequently used functions such as the Drive Mode and Focus Mode is displayed on the screen, allowing you to quickly call up the functions.
For details on functions that can be registered to the function menu, refer to the following URL:
https://support.d-imaging.sony.co.jp/support/tutorial/ilc/ilce-7sm3/l/function.php

Example of function menu

The displayed items differ depending on the camera status.

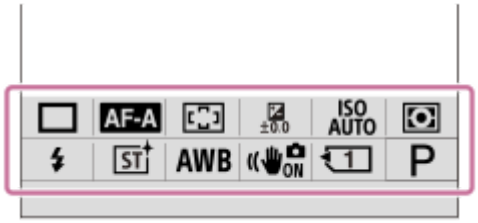

Hint

- Use MENU → (Setup) → [Operation Customize] →[Fn Menu Settings] to register your favorite functions in the function menu. You can register 12 functions for shooting still images and 12 functions for shooting movies separately.
- When [Touch Operation] is set to [On], touch operations on the menu screen are possible.
- When [Touch Operation] is set to [On], you can also open [Fn Menu Settings] by holding down the icon in the function menu.

1. **Press the DISP on the control wheel repeatedly to display a screen mode other than [For viewfinder].**

2. **Press the Fn (Function) button.**

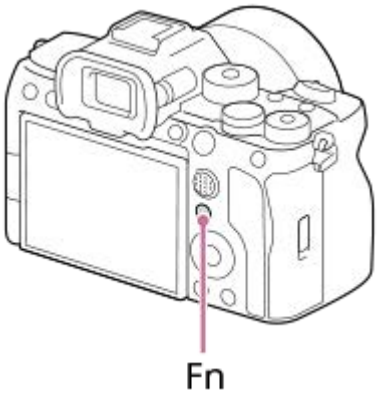

3. **Press the top/bottom/left/right side of the control wheel to select a function to set.**

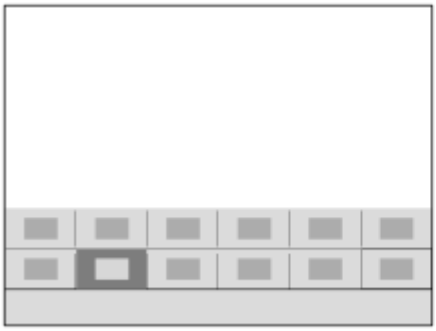

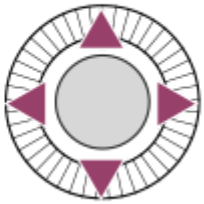

4 **Turn the front dial to select the desired setting, and press the center of the control wheel.**

- Some functions can be fine-tuned using the rear dial.

Using the Fn button in the [For viewfinder] display

If you press the Fn button while the monitor display is set to [For viewfinder], you can directly operate items you want to change.

In the auto mode

In the P/A/S/M mode

- The displayed contents and their positions shown in the illustrations are just a guideline, and may differ from the actual display.

To adjust settings from the dedicated setting screens

Select the icon for the desired function and then press the center of the control wheel. The dedicated setting screen for the function will appear. Follow the operating guide **(A)** to adjust settings.

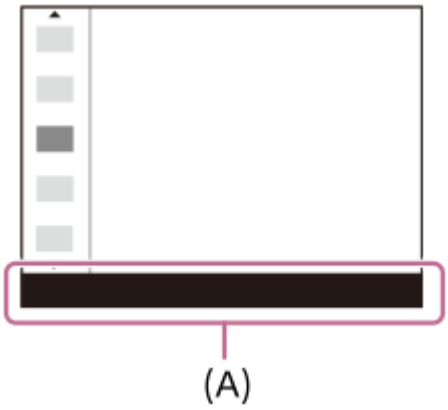

Note

- Items that are grayed out on the [For viewfinder] screen cannot be changed by pressing the Fn button.
- Some settings, such as [Creative Look] and [Picture Profile], cannot be operated on the [For viewfinder] screen unless you enter the dedicated setting screen.

Related Topic

- Fn Menu Settings
- Using the DISP (Display Setting) button

5-021-326-12(1) Copyright 2020 Sony Corporation

Interchangeable Lens Digital Camera
ILCE-7SM3 α7SIII

Using the DISP (Display Setting) button

By pressing the DISP (Display Setting) button, you can change the content displayed on the screen during shooting and playback. The display switches each time the DISP button is pressed. The viewfinder display and the monitor display for shooting can be set separately.

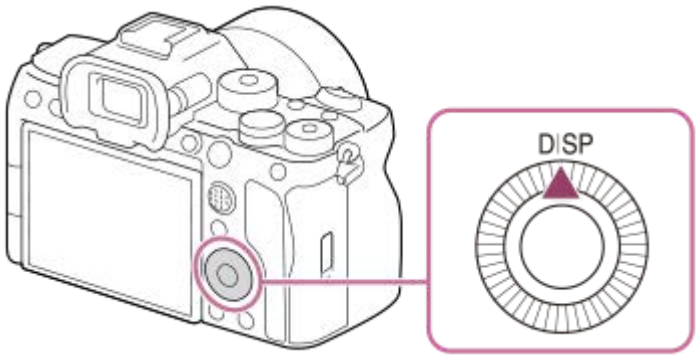

Hint

- The monitor can be turned off with the DISP button. Add a check mark to [Monitor Off] under MENU → (Setup) → [Operation Customize] → [DISP (Screen Disp) Set] → [Monitor].

During shooting (Monitor)

Display All Info. → No Disp. Info. → Histogram → Level → For viewfinder → Display All Info.

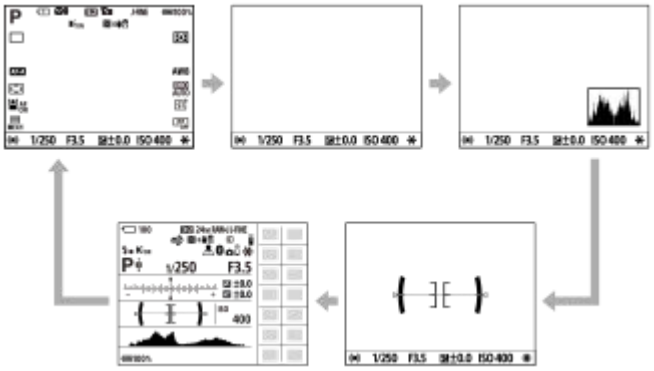

During shooting (Viewfinder)

Level → No Disp. Info. → Histogram → Level

- To switch the information displayed on the viewfinder, press the DISP button while looking into the viewfinder.

During playback (Monitor/Viewfinder)

Display Info. → Histogram → No Disp. Info. → Display Info.

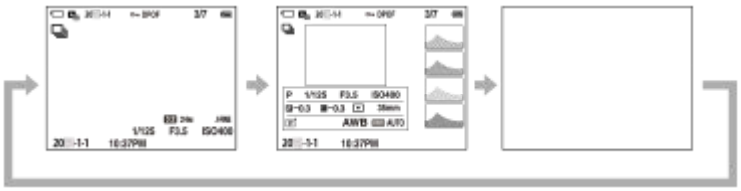

- If the image has an overexposed or underexposed area, the corresponding section will blink on the histogram display (overexposed/underexposed warning).
- The settings for playback are also applied in [Auto Review].

Note

- The displayed contents and their position shown in the illustration are just a guideline, and may differ from the actual display.
- The following are not displayed in the default settings.
  - Monitor Off
  - Display All Info. (when using the viewfinder)
- In the movie recording modes, [For viewfinder] cannot be displayed. If the monitor display is set to [For viewfinder], the display will switch to all information when movie shooting starts.

Related Topic

- DISP (Screen Disp) Set (Monitor/Finder)

5-021-326-12(1) Copyright 2020 Sony Corporation

Interchangeable Lens Digital Camera
ILCE-7SM3 α7SIII

Using the Delete button

You can delete an image currently being displayed by pressing the (Delete) button.

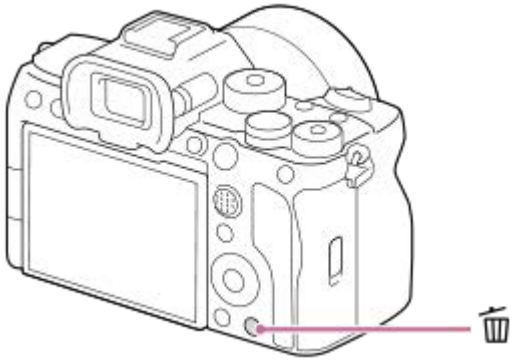

- When a confirmation message appears after you press the (Delete) button, use the control wheel to select [Delete] and press the center.
- You can also delete two or more images at once.
  Select MENU → (Playback) → [Delete] → [Delete]. Then, select the images you want to delete.

Hint

- Other than the single-image playback screen, you can also use the (Delete) button for the following operations.
  - Custom Key
  - In-Camera Guide

Related Topic

- Deleting multiple selected images (Delete)
- Delete confirm.
- Using the C (custom) buttons
- In-Camera Guide

5-021-326-12(1) Copyright 2020 Sony Corporation

Interchangeable Lens Digital Camera
ILCE-7SM3 α7SIII

Using the AEL button

If the subject does not reach the proper brightness even when you point the camera toward the subject and press the shutter button halfway down, you can press the AEL button at the desired brightness to perform metering and lock the exposure (AE lock function). Once the exposure is locked, refocus on the subject and shoot the image.

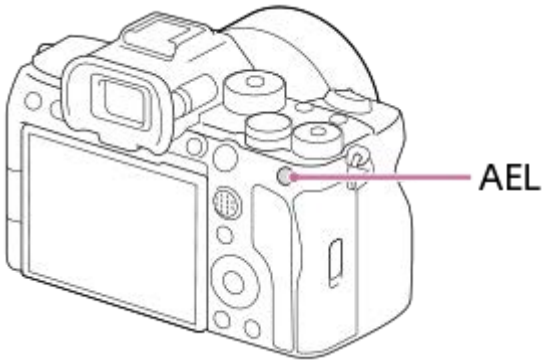

Hint

- In the default settings, [AEL hold] is assigned to the AEL button.

Related Topic

- AE lock

5-021-326-12(1) Copyright 2020 Sony Corporation

Interchangeable Lens Digital Camera
ILCE-7SM3 α7SIII

Using the AF-ON button

You can use the AF-ON button to adjust the focus without pressing the shutter button halfway down ([AF On] function) in the following cases:

- When you want to focus at a specific shooting distance predicting the position of the subject.
- When you want to focus and release the shutter separately.

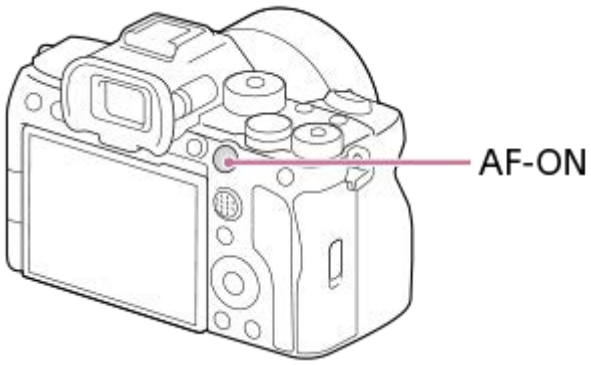

Related Topic

- AF On

5-021-326-12(1) Copyright 2020 Sony Corporation

Interchangeable Lens Digital Camera
ILCE-7SM3 α7SIII

Using the front dial and rear dial

You can use the front dial **(A)** or rear dial **(B)** to quickly change the setting values in the following cases:

- When you want to adjust the aperture value or shutter speed.
- When you want to change the camera settings during shooting.

During playback, you can turn the dials to browse images.

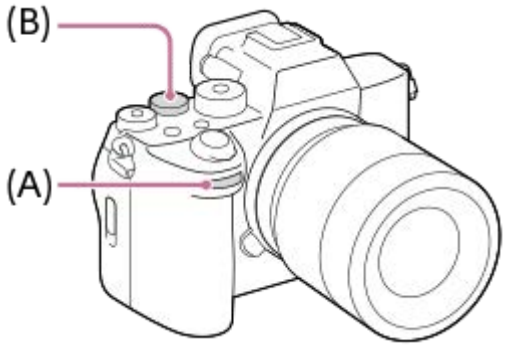

You can also use the [My Dial Settings] function to assign your desired functions to the front dial/rear dial, and recall those functions when required.

Related Topic

- Aperture Priority
- Shutter Priority
- Manual Exposure
- Exposure Ctrl Type
- Changing the function of the dial temporarily (My Dial Settings)
- Dial Setup
- Av/Tv Rotate
- Select Image Jump Dial

5-021-326-12(1) Copyright 2020 Sony Corporation

Interchangeable Lens Digital Camera
ILCE-7SM3 α7SIII

Using the keyboard

When manual character entry is required, a keyboard is displayed on the screen. For examples of functions that use the keyboard, see "Related Topic" at the bottom of this page.

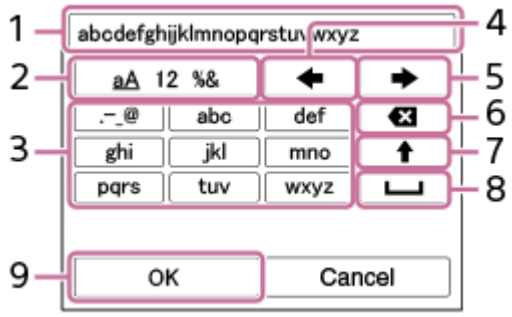

1. **Input box**
   The characters you entered are displayed.
2. **Switch character types**
   Each time you press this key, the character type will switch between alphabet letters, numerals and symbols.
3. **Keyboard**
   Each time you press this key, the characters corresponding to that key will be displayed one-by-one in order. To switch letters from lower to upper case, press ↑ (Up arrow).
4. ← (Left arrow)
   Moves the cursor in the input box to the left.
5. → (Right arrow)
   Moves the cursor in the input box to the right. This key is also used to finalize the input of a character being edited and move to the next character.
6. ⌫ (Delete)
   Deletes the character preceding the cursor.
7. ↑ (Up arrow)
   Switches a letter to upper or lower case.
8. ␣ (Space)
   Enters a space.
9. **OK**
   Press this key after entering characters to finalize the entered characters.

The procedure for entering alphabetic characters is explained below.

1 Use the control wheel to move the cursor to the desired key.

- Each time you press the center of the control wheel, the characters will change
- To switch the letter to upper or lower case, press ↑ (Up arrow).

2 When the character that you want to enter appears, press → (Right arrow) to confirm the character.

- Make sure to confirm one character at a time. Unless a character is confirmed, you cannot enter the next character.
- Even if you do not press → (Right arrow), the entered character will be automatically confirmed after several seconds.

3 After you finish entering all characters, press [OK] to finalize the entered characters.

- To cancel input, select [Cancel].

I

Related Topic

- Copyright Info
- Access Point Set.
- Wired LAN (USB-LAN)
- Edit Device Name
- Security(IPsec)

5-021-326-12(1) Copyright 2020 Sony Corporation

Interchangeable Lens Digital Camera
ILCE-7SM3 α7SIII

Basic icons

This section describes the screen display when the shooting mode is P (Program Auto).

- The examples are of the display when the screen is in the all-information display mode.
- The displayed content and positions are for reference only, and may differ from the actual display. Some icons may not be displayed depending on the camera settings.

During still image shooting

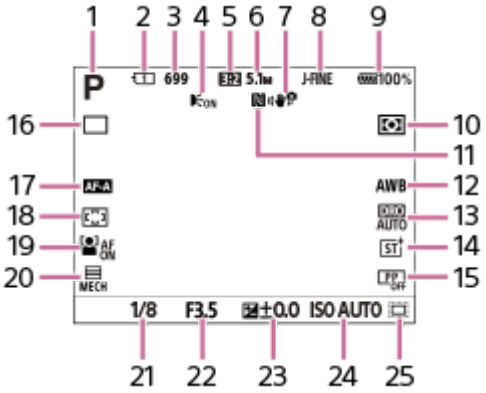

1. The mode dial is set to P (Program Auto).
2. Number of the memory card slot recording the shooting data
3. Number of still images that can be recorded on the memory card in the slot indicated by 2
4. Displayed when [AF Illuminator] is set to [Auto] and the camera detects that the AF Illuminator is required
5. [Aspect Ratio] is set to [3:2].
6. [JPEG Image Size] is set to [L: 5.1M].
7. [SteadyShot] is set to [On].
8. [JPEG/HEIF Switch] is set to [JPEG]. [JPEG Quality] is set to [Fine].
9. Remaining battery level
10. [Metering Mode] is set to [Multi].
11. NFC is active. [Ctrl w/ Smartphone] under [Ctrl w/ Smartphone] is set to [On].
12. [White Balance] is set to [Auto].
13. [D-Range Optimizer: Auto] is selected.
14. [Creative Look] is set to [ST].
15. [Picture Profile] is set to [Off].
16. [Drive Mode] is set to [Single Shooting].
17. [Focus Mode] is set to [Automatic AF].
18. [Focus Area] is set to [Wide].
19. [Face/Eye Prior. in AF] is set to [On].
20. [Shutter Type] is set to[Mechanical Shutter].
21. Shutter speed
22. Aperture value
23. Exposure compensation
24. [ISO] is set to [ISO AUTO].
25. [APS-C S35 Shooting] is set to [On] or [Auto], and the recordable area is the APS-C-equivalent size.

During movie recording

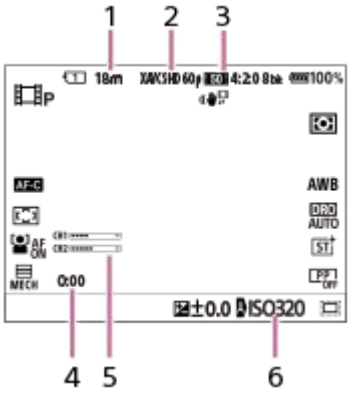

1. Recordable movie time for the currently displayed slot
2. [File Format] is set to [XAVC S HD].
3. [Movie Settings] is set to [60p 50M 4:2:0 8bit].
4. Actual movie recording time
5. [Audio Level Display] is set to [On].
6. [ISO] is set to [ISO AUTO]. (The ISO value automatically set by the camera is displayed.)

Related Topic

- List of icons on the monitor

5-021-326-12(1) Copyright 2020 Sony Corporation

Interchangeable Lens Digital Camera
ILCE-7SM3 α7SIII

In-Camera Guide

The [In-Camera Guide] displays descriptions of MENU items, Fn (Function) items, and settings.

1 **Select the MENU or Fn item for which you want to see a description, and then press the (Delete) button (A).**

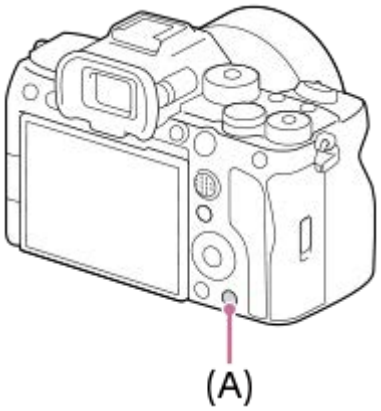

The descriptions of the item are displayed.

5-021-326-12(1) Copyright 2020 Sony Corporation

Interchangeable Lens Digital Camera
ILCE-7SM3 α7SIII

Charging the battery pack using a charger

1 Insert the battery pack into the battery charger.

- Place the battery pack on the battery charger aligning the direction of ▲ (triangle) mark.
- Slide the battery pack to the end.

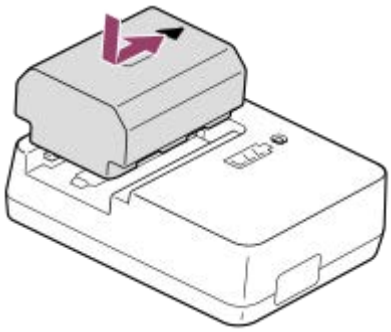

2 Connect the power cord (supplied) to the battery charger, and connect the battery charger to the wall outlet (wall socket).

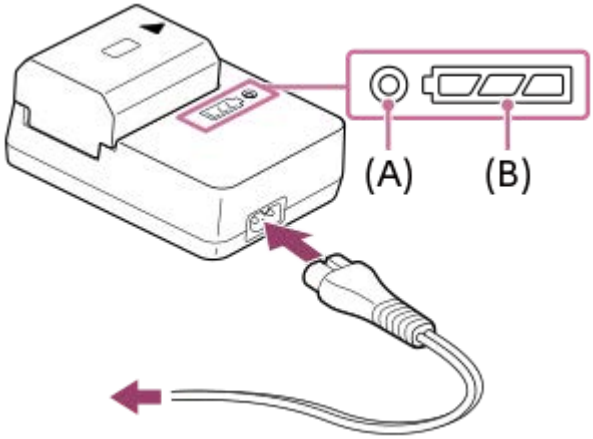

- When charging starts, the CHARGE lamp **(A)** lights up in orange.
- You can check the approximate charging status with the charging status indicator lamp **(B)** as shown in the following table. (The orange color indicates the lighting of the lamp.)
- When the CHARGE lamp and charging status indicator lamp light up and then immediately turn off, the battery pack is fully charged.

Charging status	CHARGE lamp/Charging status indicator lamp
Immediately after attaching the battery pack - 30%	● □□□
30% - 60%	● □□▰
60% - 90%	● □▰▰
90% - Fully charged	○ ▰▰▰
Full charging completed	○ □□□

The charge level shown by the charging status indicator lamp and the percentages in the above table are rough guides.

The actual status may differ depending on the ambient temperature and the condition of the battery pack.

- Charging time (Full charge): The charging time is approximately 150 min.
- The above charging time applies when charging a fully depleted battery pack at a temperature of 25°C (77°F). Charging may take longer depending on conditions of use and circumstances.

Note

- Use a nearby wall outlet (wall socket) when using the AC Adaptor/Battery Charger. If any malfunction occurs, disconnect the plug from the wall outlet (wall socket) immediately to disconnect from the power source.
  If you use the product with a charge lamp, note that the product is not disconnected from the power source even when the lamp turns off.
- Before charging, be sure to also read “Notes on the battery pack and charging the battery.”

Related Topic

- Inserting/removing the battery pack
- Notes on the battery pack and charging the battery

5-021-326-12(1) Copyright 2020 Sony Corporation

Interchangeable Lens Digital Camera
ILCE-7SM3 α7SIII

Inserting/removing the battery pack

1. **Slide the switch on the battery cover to open the cover.**

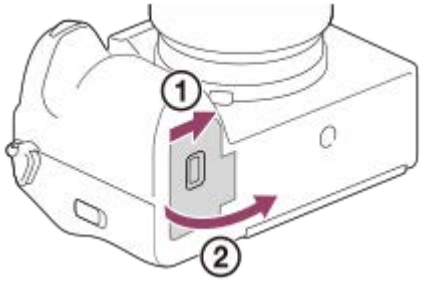

2. **Insert the battery pack while pressing the lock lever (A) with the tip of the battery until the battery locks into place.**

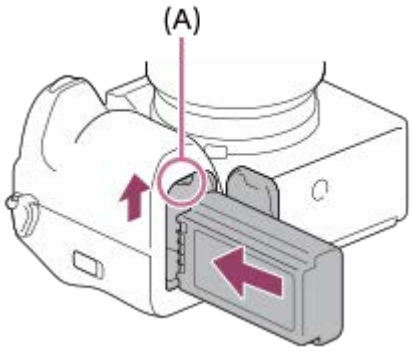

3. **Close the cover and slide the switch to the LOCK side.**

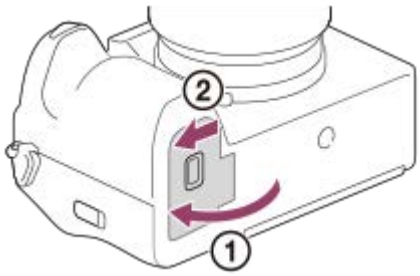

To remove the battery pack

Make sure that the access lamp is not lit, and turn off the camera. Then, slide the lock lever **(A)** and remove the battery pack. Be careful not to drop the battery pack.

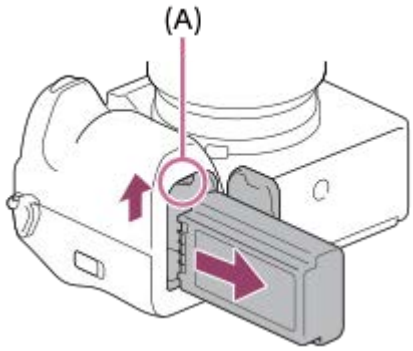

Related Topic

- Charging the battery pack using a charger
- Charging the battery pack while it is inserted into the camera
- Notes on the battery pack and charging the battery

5-021-326-12(1) Copyright 2020 Sony Corporation

Charging the battery pack while it is inserted into the camera

You can use a USB cable to charge from an external power source, such as a commercially available USB AC adaptor or mobile battery.
When a device compatible with USB-PD (USB Power Delivery) is connected to the camera, fast charging is possible.

1. **Turn off the camera, and connect an external power source to the USB Type-C terminal on the camera.**

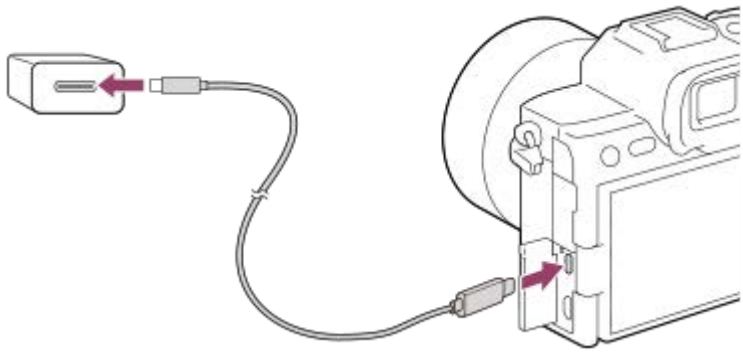

Charge lamp on the camera (orange)
Lit; Charging
Off: Charging finished
Flashing: Charging error or charging paused temporarily because the camera is not within the proper temperature range

- The charge lamp turns off when charging is completed.

Note

- USB charging is not possible from the Multi/Micro USB terminal. Use the USB Type-C terminal to charge the battery pack.
- If the product is connected to a laptop computer that is not connected to a power source, the laptop battery level decreases. Do not leave the product connected to a laptop computer for an extended period of time.
- Do not turn on/off or restart the computer, or wake the computer from sleep mode when a USB connection has been established between the computer and the camera. Doing so may cause a malfunction. Before turning on/off or restarting the computer, or waking the computer from sleep mode, disconnect the camera from the computer.
- Charging cannot be guaranteed with a custom-built computer, modified computer, or a computer connected through a USB hub.
- The camera may not operate correctly when other USB devices are used at the same time.
- We recommend using a USB-PD device that is compatible with an output of 9V/3A or 9V/2A.
- Before charging, be sure to also read “Notes on the battery pack and charging the battery.”

Related Topic

- Inserting/removing the battery pack
- Notes on the battery pack and charging the battery

5-021-326-12(1) Copyright 2020 Sony Corporation

Interchangeable Lens Digital Camera
ILCE-7SM3 α7SIII

Using the battery charger abroad

You can use the battery charger (supplied) in any country or region where the power supply is within 100 V to 240 V AC and 50 Hz/60 Hz.
Depending on the country/region, a converting plug adaptor may be needed to connect to a wall outlet (wall socket). Consult a travel agency, etc., and prepare one in advance.

Note

- Do not use an electronic voltage transformer as doing so may cause a malfunction.

5-021-326-12(1) Copyright 2020 Sony Corporation

Interchangeable Lens Digital Camera
ILCE-7SM3 α7SIII

Supplying power from a wall outlet (wall socket)

Use an AC adaptor, etc. to shoot and play back images while power is supplied from a wall outlet (wall socket). This conserves the camera's battery power.
We recommend using a USB-PD (USB Power Delivery) device that is compatible with an output of 9V/3A.

1. **Insert a sufficiently charged battery pack into the camera.**
   - The camera will not activate if there is no remaining battery. Insert a sufficiently charged battery pack into the camera.
2. **Connect the USB cable to the USB Type-C terminal on the camera.**
3. **Connect to a wall outlet (wall socket) using an AC adaptor, etc.**
4. **Turn on the camera.**
   - An icon ( ) indicating that USB power is being supplied will appear on the monitor, and power supply will start.

Note

- USB power cannot be supplied from the Multi/Micro USB Terminal. Use the USB Type-C terminal to supply power.
- As long as the power is on, the battery pack will not be charged even if the camera is connected to the AC Adaptor, etc.
- Under certain conditions, power may be supplied from the battery pack supplementarily even if you are using the AC adaptor, etc.
- Do not remove the battery pack while power is supplied from a wall outlet (wall socket). If you remove the battery pack, the camera will be turned off.
- Only connect the USB cable to the camera or disconnect the USB cable from the camera while the camera is turned off.
- Depending on the camera and battery temperature, the continuous recording time may be shortened while power is supplied from a wall outlet (wall socket).
- When using a mobile charger as a power source, confirm that it is fully charged before use. Also, be careful of the remaining power on the mobile charger during use.
- Operation cannot be guaranteed with all external power supplies.

Related Topic

- Inserting/removing the battery pack

5-021-326-12(1) Copyright 2020 Sony Corporation

Interchangeable Lens Digital Camera
ILCE-7SM3 α7SIII

Inserting/removing a memory card

Explains how to insert a memory card (sold separately) to the camera. You can use CFexpress Type A memory cards and SD memory cards with this camera.

1 **Slide the switch on the memory card cover to open the cover.**

2 **Insert the memory card into the slot 1.**

- When using two memory cards, insert the second one into the slot 2.
- Both Slot 1 and Slot 2 support CFexpress Type A memory cards and SD memory cards.
- Insert a CFexpress Type A memory card with the label facing the monitor, and an SD memory card with the terminal facing the monitor. Insert the card until it clicks into place.

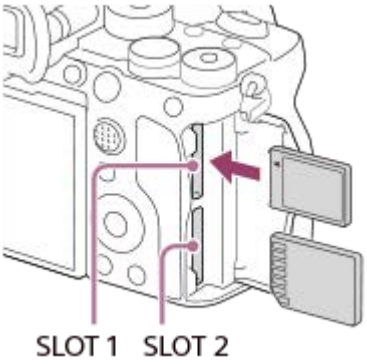

3 **Close the cover.**

Hint

- When you use a memory card with the camera for the first time, it is recommended that you format the card on the camera for more stable performance of the memory card.

- You can change the memory card slot for recording by selecting MENU → (Shooting) → [Media] → [Rec. Media Settings] → [Prioritize Rec. Media]. The Slot 1 is used in the default settings.
- To record the same image on two memory cards at the same time or to sort recorded images onto two memory card slots by the image type (still image/movie), select MENU → (Shooting) → [Media] → [Rec. Media Settings] → [Recording Mode].

To remove the memory card

Open the memory card cover and make sure that the access lamp **(A)** is not lit, then push in the memory card lightly once to remove it.

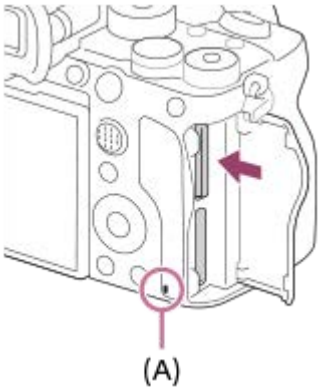

Related Topic

- Memory cards that can be used
- Notes on memory card
- Format
- Rec. Media Settings (still image/movie): Prioritize Rec. Media
- Rec. Media Settings (still image/movie): Recording Mode
- Selecting which memory card to play back (Select Playback Media)

5-021-326-12(1) Copyright 2020 Sony Corporation

Interchangeable Lens Digital Camera
ILCE-7SM3 α7SIII

Attaching/removing a lens

Turn off the camera before attaching or removing the lens.

1 Remove the body cap (A) from the camera and the rear lens cap (B) from the rear of the lens.

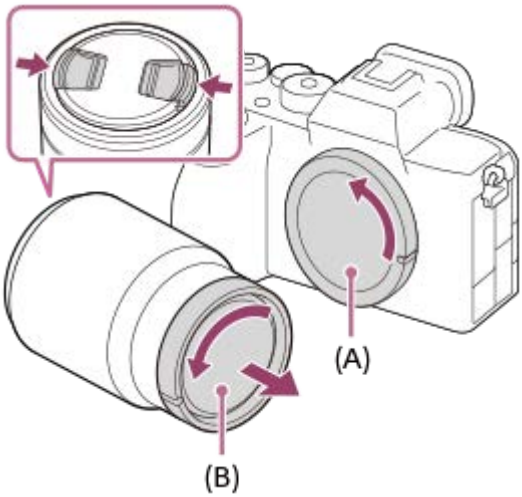

- It is recommended that you attach the front lens cap when you have done shooting.

2 Mount the lens by aligning the two white index marks (mounting indexes) on the lens and camera.

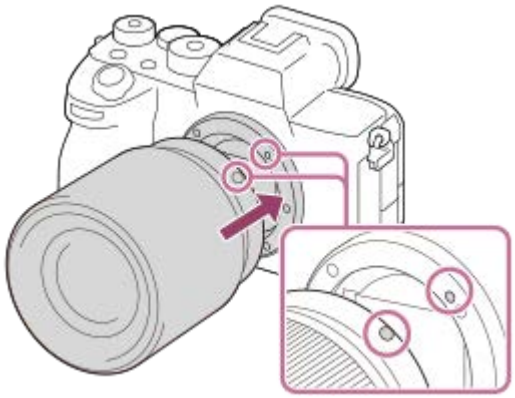

- Hold the camera with the lens mount facing down to prevent dust and debris from entering the camera.

3 While pushing the lens lightly toward the camera, turn the lens slowly in the direction of the arrow until it clicks into the locked position.

- Be sure to hold the lens straight when attaching it.

To remove the lens

Keep pressing the lens release button **(A)** and turn the lens in the direction of the arrow until it stops.
After removing the lens, attach the body cap to the camera and the lens caps to the front and rear of the lens to prevent dust and debris from entering the camera and lens.

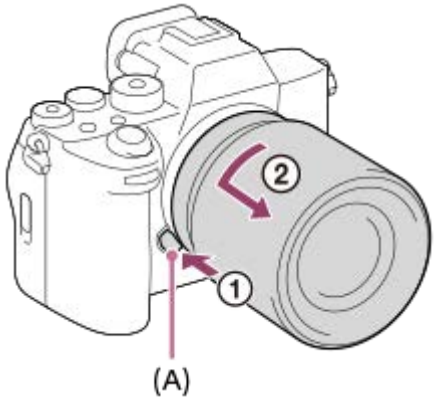

Lens hood

We recommend that you use the lens hood to prevent light outside the shooting frame from affecting the image. Attach the lens hood so that the indexes on the lens and lens hood are aligned.
(There may be no lens hood index on some lenses.)

Note

- When attaching/removing the lens, work quickly in a dust-free location.
- Do not press the lens release button when attaching a lens.
- Do not use force when attaching a lens.
- A Mount Adaptor (sold separately) is required to use an A-mount lens (sold separately). When using the Mount Adaptor, refer to the operating manual supplied with the Mount Adaptor.
- If you want to shoot full-frame images, use a full-frame size compatible lens.
- When you use a lens with a tripod socket, attach a tripod to the tripod socket of the lens to help balance the weight of the lens.
- When carrying the camera with a lens attached, hold both the camera and the lens firmly.
- Do not hold the part of the lens that is extended for zoom or focus adjustment.
- Attach the lens hood properly. Otherwise, the lens hood may not have any effect or may be partially reflected in the image.
- Remove the lens hood when using the flash as the lens hood blocks the flash light and may appear as a shadow on the image.

Related Topic

- Mount Adaptor

5-021-326-12(1) Copyright 2020 Sony Corporation

Setting language, date and time

The setting screen for language, date and time is displayed automatically when you turn on this product for the first time, initialize this product or when the internal rechargeable backup battery has discharged.

1. **Set the ON/OFF (Power) switch to “ON” to turn on the camera.**
2. **Select the desired language and then press the center of the control wheel.**
3. **Make sure that [Enter] is selected on the area/date/time confirmation screen, and then press the center of the control wheel.**
4. **Select the desired geographic location, set [Daylight Savings], and then press the center.**
   - [Daylight Savings] can be switched on/off using the top/bottom of the control wheel.
5. **Set the date format (year/month/day), and press the center.**
6. **Set the date and time (hour/minute/second), and press the center.**
   - To set the date and time or geographic location again at a later point, select MENU → (Setup) → [Area/Date] → [Area/Date/Time Setting].

On maintaining the date and time

This camera has an internal rechargeable battery for maintaining the date and time and other settings regardless of whether the power is on or off, or whether the battery pack is charged or discharged.
To charge the internal rechargeable backup battery, insert a charged battery pack into the camera, and leave the product for 24 hours or more with the power off.
If the clock resets every time the battery pack is charged, the internal rechargeable backup battery may be worn out. Consult your service facility.

Note

- If the date and time setting is canceled halfway, the setting screen for the date and time appears every time you turn on the camera.
- The built-in clock of the camera may exhibit time errors. Adjust the time at regular intervals.

Related Topic

- Area/Date/Time Setting

5-021-326-12(1) Copyright 2020 Sony Corporation

Interchangeable Lens Digital Camera
ILCE-7SM3 α7SIII

Confirmation before shooting

This section introduces useful settings and functions that you should know when using the camera. We recommend that you confirm these settings and functions before using the camera.
From each item name listed below, you can jump to the page explaining the respective functions.

Preparing a memory card for use with this camera

- Format
- Recover Image DB (still image/movie)

Selecting a memory card for recording

- Rec. Media Settings (still image/movie): Prioritize Rec. Media

Recording using two memory cards

- Rec. Media Settings (still image/movie): Recording Mode
- Rec. Media Settings (still image/movie): Auto Switch Media

Preventing accidental failure to insert a memory card

- Release w/o Card

Selecting a memory card for playback

- Selecting which memory card to play back (Select Playback Media)

Setting whether camera operating sounds are generated

- Audio signals

Resetting shooting settings or resetting all camera settings

- Setting Reset

ILCE-7SM3 support information

For information about the basics of the camera along with compatible lenses and accessories, visit the following website.
https://www.sony.net/tutorial/ilc/7sm3/

5-021-326-12(1) Copyright 2020 Sony Corporation

Interchangeable Lens Digital Camera
ILCE-7SM3 α7SIII

Shooting still images (Intelligent Auto)

This section describes how to shoot still images in the [Intelligent Auto] mode. In the [Intelligent Auto] mode, the camera automatically focuses and automatically determines the exposure based on the shooting conditions.

1. **Set the mode dial to AUTO (Auto Mode).**
   - The shooting mode will be set to iA (Intelligent Auto).

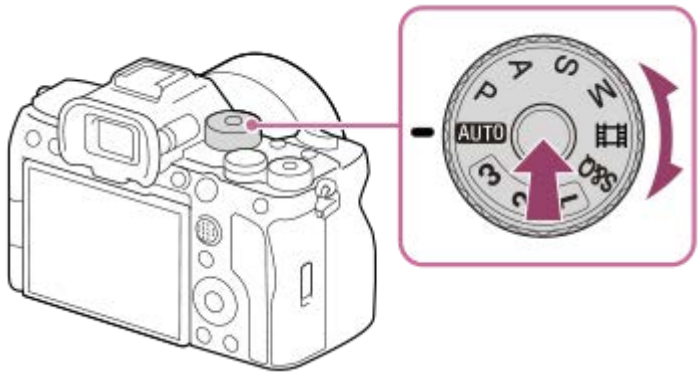

   - Turn the mode dial while pressing the mode dial lock release button in the center of the mode dial.

2. **Adjust the monitor angle, and hold the camera. Or look through the viewfinder and hold the camera.**

3. **When a zoom lens is mounted, enlarge images by rotating the zoom ring.**

4. **Press the shutter button halfway down to focus.**

   When the image is in focus, a beep sounds and the indicator (such as ●) lights up.

5. **Press the shutter button fully down.**

To select the focus mode yourself (Focus Mode / Focus Area)

Specifying a focus mode, such as selecting AF-S (Single-shot AF) for landscapes or still subjects and selecting AF-C (Continuous AF) for moving subjects, makes it easier to focus on the desired subject. You can also specify the focus position and range using [Focus Area].

Shooting while focusing on human eyes

The [Face/Eye Prior. in AF] function under [Face/Eye AF] is enabled in the default settings, so you can use the Eye AF function immediately.

To shoot images with the focus locked on the desired subject (Focus-lock)

When you focus on the subject, the focus is locked while the shutter button is pressed halfway down. Switch to the desired composition and press the shutter button all the way down to take the picture.

- You can lock the focus on non-moving subjects. Set [Focus Mode] to AF-S (Single-shot AF).
- Setting [Focus Area] to [Center Fix] makes it easier to focus on subjects located in the center of the screen.

Hint

- When the product cannot focus automatically, the focus indicator flashes and the beep does not sound. Either recompose the shot or change the focus setting. In [Continuous AF] mode, (focus indicator) lights up and the beep indicating that the focus has been achieved does not sound.

Note

- An icon indicating that data is being written is displayed after shooting. Do not remove the memory card while the icon is displayed. Doing so will prevent images from being recorded normally.

Related Topic

- Selecting the focus method (Focus Mode)
- Selecting the focus area (Focus Area)
- Playing back still images
- Auto Review (still image)

5-021-326-12(1) Copyright 2020 Sony Corporation

Interchangeable Lens Digital Camera
ILCE-7SM3 α7SIII

Shooting movies

You can set the recording format and exposure and record movies by using the dedicated menu items for movies.

1 Set the mode dial to (Movie).

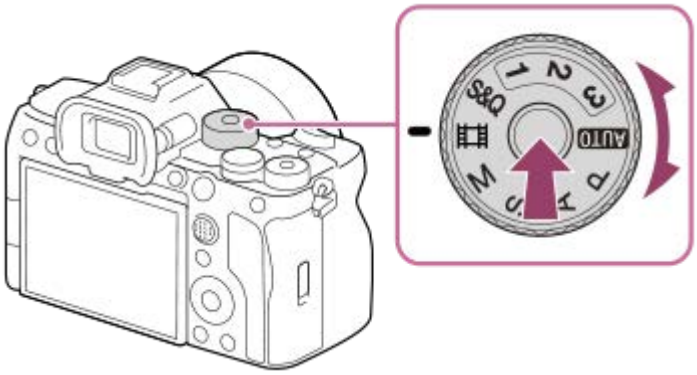

- Turn the mode dial while pressing the mode dial lock release button in the center of the mode dial.

2 Press the MOVIE (Movie) button to start recording.

3 Press the MOVIE button again to stop recording.

To select the recording format (File Format)

The resolution and degree of compatibility vary depending on the recording format (XAVC HS 4K/XAVC S 4K/XAVC S HD/XAVC S-I 4K/XAVC S-I HD). Select the format in accordance with the purpose of the movie to be shot.

To select the frame rate or image quality (Movie Settings)

The frame rate determines the smoothness of motion in movies. ([Movie Settings] → [Rec Frame Rate])
The image quality changes with the bit rate. ([Movie Settings] → [Record Setting])
If the bit rate is high, the amount of information will increase and you can shoot high-quality movies. However, this will result in a larger volume of data.
Select the frame rate and bit rate according to your preference and purpose.

To adjust the exposure (Exposure Ctrl Type/Exposure Mode)

When [Exposure Ctrl Type] is set to [P/A/S/M Mode], select the exposure mode using the shutter speed and aperture value combination in the same way as when shooting a still image.

When [Exposure Ctrl Type] is set to [Flexible Exp. Mode], you can set both the shutter speed and aperture value automatically or manually.

To select the focusing method (Focus Mode/ Focus Area)

Select AF-C (Continuous AF) or MF (Manual Focus) for [Focus Mode]. You can specify the focus area by setting [Focus Area].

Even during shooting with manual focus, you can temporarily switch to auto focus in the following ways.

- Press the custom key to which [AF On] is assigned, or press the shutter button halfway.
- Press the custom key to which [Eye AF] is assigned.
- Touch the subject on the monitor.

To record movie audio in 4 channels

Attach a genuine Sony accessory that supports 4-channel and 24-bit audio recording to the Multi Interface Shoe of the camera.

Hint

- You can also assign the start/stop movie recording function to a preferred key.
- You can focus quickly while shooting movies by pressing the shutter button halfway down. (The sound of auto focus operation may be recorded in some cases.)
- You can change the settings for ISO sensitivity, exposure compensation, and focus area while shooting movies.
- The sounds of the camera and lens in operation may be recorded during movie shooting. To prevent sounds from being recorded, set [Audio Recording] to [Off].
- To prevent the operating sound of the zoom ring from being recorded when a power zoom lens is used, we recommend recording movies using the zoom lever. When moving the zoom lever, be careful not to flip the lever.

Note

- An icon indicating that data is being written is displayed after shooting. Do not remove the memory card while the icon is displayed.
- You cannot start recording a movie while writing data. Wait until data writing is completed and “STBY” is displayed before recording a movie.
- If the (Overheating warning) icon appears, the temperature of the camera has risen. Turn the power off and cool the camera and wait until the camera is ready to shoot again.
- The temperature of the camera tends to rise when shooting movies continuously, and you may feel that the camera is warm. This is not a malfunction. Also, [Internal temp. high. Allow it to cool.] may appear. In such cases, turn the power off and cool the camera and wait until the camera is ready to shoot again.
- For the continuous shooting time of a movie recording, refer to “Recordable movie times.” When movie recording is finished, you can record another movie by pressing the MOVIE button again. Recording may stop to protect the product, depending on the temperature of the product or the battery.

Related Topic

- File Format (movie)
- Movie Settings (movie)
- Exposure Ctrl Type
- Movie: Exposure Mode
- Selecting the focus method (Focus Mode)
- Selecting the focus area (Focus Area)
- Shoe Audio Set.
- Assigning frequently used functions to buttons (Custom Key Setting)

- REC w/ Shutter (movie)
- Audio Recording
- Recordable movie times

5-021-326-12(1) Copyright 2020 Sony Corporation

Interchangeable Lens Digital Camera
ILCE-7SM3 α7SIII

Finding functions from MENU

The displayed MENU items vary depending on the position of the mode dial. In the table below, the modes in which each MENU item is displayed are indicated by the still image/movie icons.

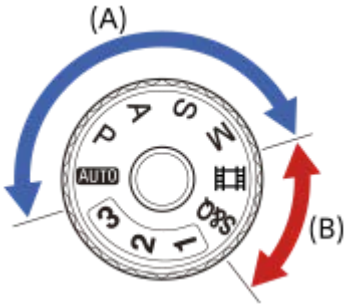

: The menu item is displayed when the mode dial position is set to the still image shooting modes **(A)**.
: The menu item is displayed when the mode dial position is set to the movie recording modes **(B)**.
: The menu item is displayed when the mode dial position is set to either the still image shooting modes **(A)** or the movie recording modes **(B)**.

- When the mode dial is set to 1, 2, or 3 (MR Recall Camera Setting), the displayed menu items are determined by the mode registered to each registration number.

(Shooting) tab

Groups		Menu items
Image Quality		JPEG/HEIF Switch
		File Format
		RAW File Type
		JPEG Quality
		HEIF Quality
		JPEG Image Size
		HEIF Image Size
		Aspect Ratio
		File Format
		Movie Settings
		S&Q Settings
		Proxy Settings
		APS-C S35 Shooting
		Long Exposure NR
		High ISO NR

Groups		Menu items
		HLG Still Image
		Color Space
		Lens Compensation
Media		Format
		Rec. Media Settings: Prioritize Rec. Media
		Rec. Media Settings: Recording Mode
		Rec. Media Settings: Auto Switch Media
		Recover Image DB
		Display Media Info.
File		File/Folder Settings
		Select REC Folder
		Create New Folder
		IPTC Information
		Copyright Info
		Write Serial Number
		File Settings
Shooting Mode		Exposure Mode
		S&Q Exposure Mode
		Exposure Ctrl Type
		MR Recall Camera Setting
		MR Camera Set. Memory
		MR Memory/Recall Media
		Reg. Custom Shoot Set
Drive Mode		Drive Mode: Single Shooting
		Drive Mode: Cont. Shooting
		Drive Mode: Self-timer(Single)
		Drive Mode: Self-timer(Cont)
		Drive Mode: Cont. Bracket
		Drive Mode: Single Bracket
		Drive Mode: WB bracket
		Drive Mode: DRO Bracket
		Bracket Settings
		Interval Shoot Func.

Groups		Menu items
Shutter/Silent		Silent Mode Settings
		Shutter Type
		e-Front Curtain Shut.
		Release w/o Lens
		Release w/o Card
		Anti-flicker Shoot.
Audio Recording		Audio Recording
		Audio Rec Level
		Audio Out Timing
		Wind Noise Reduct.
		Shoe Audio Set.
		Audio Level Display
TC/UB		Time Code Preset
		User Bit Preset
		Time Code Format
		Time Code Run
		Time Code Make
		User Bit Time Rec
Image Stabilization		SteadyShot
		SteadyShot
		SteadyShot Adjust.
		Focal Length
Zoom		Zoom
		Zoom Range
		Zoom Speed
		Zoom Speed
Shooting Display		Grid Line Display
		Grid Line Type
		Live View Display Set.
		Emph disp dur REC
Marker Display		Marker Display
		Center Marker
		Aspect Marker

Groups		Menu items
		Safety Zone
		Guideframe

(Exposure/Color) tab

Groups		Menu items
Exposure		Auto Slow Shutter
		ISO
		ISO Range Limit
		ISO AUTO Min. SS
		Auto/Manual Swt. Set.
Exposure Comp.		Exposure Comp.
		Reset EV Comp.
		Exposure step
		Exposure Std. Adjust
Metering		Metering Mode
		Face Priority in Multi Metering
		Spot Metering Point
		AEL w/ Shutter
Flash		Flash Mode
		Flash Comp.
		Exp.comp.set
		Wireless Flash
		Red Eye Reduction
		External Flash Set.
White Balance		White Balance
		Priority Set in AWB
		Shutter AWB Lock
		Shockless WB
Color/Tone		D-Range Optimizer
		Creative Look
		Picture Profile
Zebra Display		Zebra Display
		Zebra Level

AF/MF (Focus) tab

Groups		Menu items
AF/MF		Focus Mode
		Priority Set in AF-S
		Priority Set in AF-C
		AF Tracking Sensitivity
		AF Illuminator
		Aperture Drive in AF
		AF w/ Shutter
		Pre-AF
		AF Transition Speed
		AF Subj. Shift Sensitivity
Focus Area		Focus Area
		Focus Area Limit
		Switch V/H AF Area
		Focus Area Color
		AF Area Registration
		Del. Regist. AF Area
		AF Area Auto Clear
		AF-C Area Display
		Phase Detect. Area
		Circ. of Focus Point
		AF Frame Move Amt
Face/Eye AF		Face/Eye Prior. in AF
		Face/Eye Subject
		Right/Left Eye Select
		Face/Eye Frame Disp.
		Face Memory
		Regist. Faces Priority
Focus Assistant		Auto Magnifier in MF
		Focus Magnifier
		Focus Magnif. Time
		Initial Focus Mag.
		AF in Focus Mag.

Groups		Menu items
		Initial Focus Mag.
Peaking Display		Peaking Display
		Peaking Level
		Peaking Color

(Playback) tab

Groups		Menu items
Playback Target		Select Playback Media
		View Mode
Magnification		Enlarge Image
		Enlarge Initial Mag.
		Enlarge Initial Position
Selection/Memo		Protect
		Rating
		Rating Set(Custom Key)
Delete		Delete
		Delete confirm.
Edit		Rotate
		Copy
		Photo Capture
		JPEG/HEIF Switch
Viewing		Cont. Play for Interval
		Play Speed for Interval
		Slide Show
Playback Option		Image Index
		Display as Group
		Display Rotation
		Focus Frame Display
		Select Image Jump Dial
		Image Jump Method

(Network) tab

Groups		Menu items

Groups		Menu items
Transfer/Remote		Ctrl w/ Smartphone
		Send to Smartphone
		Px Sending Target
		Cnct. during Power OFF
		FTP Transfer Func.
		PC Remote Function
		Bluetooth Rmt Ctrl
Location Information		Location Info Link
		Auto Time Correction
		Auto Area Adjustment
Wi-Fi		WPS Push
		Access Point Set.
		Wi-Fi Frequency Band
		Display Wi-Fi Info.
		SSID/PW Reset
Bluetooth		Bluetooth Function
		Pairing
		Disp Device Address
Wired LAN		LAN IP Address Setting
		Display Wired LAN Info.
Network Option		Airplane Mode
		Edit Device Name
		Import Root Certificate
		Security(IPsec)
		Reset Network Set.

(Setup) tab

Groups		Menu items
Area/Date		A Language
		Area/Date/Time Setting
		NTSC/PAL Selector
Reset/Save Settings		Setting Reset
		Save/Load Settings

Groups		Menu items
Operation Customize		Custom Key Setting
		Custom Key Setting
		Custom Key Setting
		Fn Menu Settings
		Different Set for Still/Mv
		DISP (Screen Disp) Set
		REC w/ Shutter
		Zoom Ring Rotate
Dial Customize		My Dial Settings
		Dial Setup
		Av/Tv Rotate
		Dial Ev Comp
		Function Ring(Lens)
		Lock Operation Parts
Touch Operation		Touch Operation
		Touch Sensitivity
		Touch Panel/Pad
		Touch Pad Settings
		Touch Func. in Shooting: Touch Focus
		Touch Func. in Shooting:Touch Tracking
Finder/Monitor		Select Finder/Monitor
		Monitor Brightness
		Viewfinder Bright.
		Finder Color Temp.
		Viewfinder Magnifi.
		Display Quality
		Finder Frame Rate
Display Option		TC/UB Disp. Setting
		Gamma Display Assist
		Gamma Disp. Assist Typ.
		Remain Shoot Display
		Auto Review
Power Setting Option		Power Save Start Time

Groups		Menu items
		Auto Power OFF Temp.
Sound Option		Volume Settings
		4ch Audio Monitoring
		Audio signals
USB		USB Connection
		USB LUN Setting
		USB Power Supply
External Output		HDMI Resolution
		HDMI Output Settings
		HDMI Info. Display
		CTRL FOR HDMI
Setup Option		Video Light Mode
		IR Remote Ctrl
		Sensor Cleaning
		Auto Pixel Mapping
		Pixel Mapping
		Version

☆ (My Menu) tab

Groups		Menu items
My Menu Setting		Add Item
		Sort Item
		Delete Item
		Delete Page
		Delete All
		Display From My Menu

Note

- The order in which the menu tabs are listed here differs from the actual display.

5-021-326-12(1) Copyright 2020 Sony Corporation

Interchangeable Lens Digital Camera
ILCE-7SM3 α7SIII

Contents of this chapter

The following table of contents lists the features described in this chapter (“Using the shooting functions”). From each item name, you can jump to the page describing the respective functions.

Selecting a shooting mode

- Intelligent Auto
- Program Auto
- Aperture Priority
- Shutter Priority
- Manual Exposure
- Bulb shooting
- Exposure Ctrl Type
- Auto/Manual Swt. Set.
- Movie: Exposure Mode
- S&Q Motion: Exposure Mode
- Auto Slow Shutter

Focusing

- Selecting the focus method (Focus Mode)
- Selecting the focus area (Focus Area)
- Tracking subject (Tracking function)

Face/Eye AF

- Focusing on human eyes
- Face/Eye Prior. in AF (still image/movie)
- Face/Eye Subject (still image/movie)
- Right/Left Eye Select (still image/movie)
- Face/Eye Frame Disp. (still image/movie)
- Face Memory
- Regist. Faces Priority (still image/movie)

Using the AF functions

- Focus Standard
- Adjusting the focus area settings to the camera’s orientation (horizontal/vertical) (Switch V/H AF Area)
- Registering the current focus area (AF Area Registration)
- Deleting a registered AF Area (Del. Regist. AF Area)
- Focus Area Limit (still image/movie)
- Circ. of Focus Point (still image/movie)
- AF Frame Move Amt (still image/movie)
- Focus Area Color (still image/movie)
- AF Area Auto Clear
- AF-C Area Display
- Phase Detect. Area
- AF Tracking Sensitivity
- AF Transition Speed
- AF Subj. Shift Sensitivity
- AF/MF Selector
- AF w/ Shutter
- AF On
- Focus Hold
- Pre-AF

- Priority Set in AF-S
- Priority Set in AF-C
- AF in Focus Mag.
- AF Illuminator
- Aperture Drive in AF

Using the MF functions

- Manual Focus
- Direct manual focus (DMF)
- Auto Magnifier in MF
- Focus Magnifier
- Focus Magnif. Time (still image/movie)
- Initial Focus Mag. (still image)
- Initial Focus Mag. (movie)
- Peaking Display

Adjusting the exposure/metering modes

- Exposure Comp. (still image/movie)
- Histogram display
- Reset EV Comp. (still image/movie)
- Exposure step (still image/movie)
- Exposure Std. Adjust (still image/movie)
- Dial Ev Comp
- D-Range Optimizer (still image/movie)
- Metering Mode (still image/movie)
- Face Priority in Multi Metering (still image/movie)
- Spot Metering Point (still image/movie)
- AE lock
- AEL w/ Shutter
- Zebra Display

Selecting the ISO sensitivity

- ISO (still image/movie)
- ISO Range Limit (still image/movie)
- ISO AUTO Min. SS

White balance

- White Balance (still image/movie)
- Capturing a standard white color to set the white balance (custom white balance)
- Priority Set in AWB (still image/movie)
- Shutter AWB Lock
- Shockless WB

Adding effects to images

- Creative Look (still image/movie)
- Picture Profile (still image/movie)

Shooting with drive modes (continuous shooting/self-timer)

- Drive Mode
- Cont. Shooting
- Self-timer(Single)
- Self-timer(Cont)
- Cont. Bracket
- Single Bracket
- Indicator during bracket shooting
- WB bracket
- DRO Bracket
- Bracket Settings

Interval Shoot Func.

Setting the image quality and recording format

- File Format (still image)
- RAW File Type
- JPEG/HEIF Switch
- JPEG Quality/HEIF Quality
- JPEG Image Size/HEIF Image Size
- Aspect Ratio
- HLG Still Image
- Color Space
- File Format (movie)
- Movie Settings (movie)
- S&Q Settings
- Proxy Settings
- APS-C S35 (Super35mm) Shooting (still image/movie)
- Angle of view

Using touch functions

- Touch Operation
- Touch Sensitivity
- Touch Panel/Pad
- Touch Pad Settings
- Touch Func. in Shooting: Touch Focus
- Touch Func. in Shooting:Touch Tracking

Shutter settings

- Silent Mode Settings (still image/movie)
- Shutter Type
- e-Front Curtain Shut.
- Release w/o Lens (still image/movie)
- Release w/o Card
- Anti-flicker Shoot.

Using the zoom

- The zoom features available with this product
- Clear Image Zoom/Digital Zoom (Zoom)
- Zoom Range (still image/movie)
- Zoom Speed (still image/movie)
- Zoom Speed (Remote commander) (still image/movie)
- About zoom scale
- Zoom Ring Rotate

Using the flash

- Using flash (sold separately)
- Flash Mode
- Flash Comp.
- Exp.comp.set
- Wireless Flash
- Red Eye Reduction
- FEL lock
- External Flash Set.
- Video Light Mode

Reducing blur

- SteadyShot (still image)
- SteadyShot (movie)

- SteadyShot Adjust. (still image/movie)
- SteadyShot focal length (still image/movie)

Lens Compensation (still image/movie)

Noise reduction

- Long Exposure NR
- High ISO NR

Setting the monitor display during shooting

- Auto Review (still image)
- Remain Shoot Display (still image)
- Grid Line Display (still image/movie)
- Grid Line Type (still image/movie)
- Live View Display Set.
- Aperture Preview
- Shot. Result Preview
- Bright Monitoring
- Emph disp dur REC
- Marker Display
- Gamma Display Assist
- Gamma Disp. Assist Typ.

Recording movie audio

- Audio Recording
- Audio Rec Level
- Audio Out Timing
- Wind Noise Reduct.
- Shoe Audio Set.
- Audio Level Display

TC/UB settings

- TC/UB
- TC/UB Disp. Setting

5-021-326-12(1) Copyright 2020 Sony Corporation

Interchangeable Lens Digital Camera
ILCE-7SM3 α7SIII

Intelligent Auto

The camera shoots with automatic scene recognition.

1. **Set the mode dial to AUTO (Auto Mode).**
   - The shooting mode will be set to iA (Intelligent Auto).
2. **Point the camera at the subject.**

   When the camera recognized the scene, the icon for the recognized scene appears on the screen.

3. **Adjust the focus and shoot the image.**

About Scene Recognition

The Scene Recognition function allows the camera to automatically recognize shooting conditions.
When the camera recognizes certain scenes, the following icons and guides are displayed at the top of the screen: (Portrait), (Infant), (Night Portrait), (Night Scene), (Backlight Portrait), (Backlight), (Landscape), (Macro), (Spotlight), (Low Light), (Night Scene using a tripod)

Note

- The product will not recognize the scene when you shoot images with zoom functions other than optical zoom.
- The product may not properly recognize the scene under certain shooting conditions.
- For [Intelligent Auto] mode, most of the functions are set automatically, and you cannot adjust the settings on your own.

5-021-326-12(1) Copyright 2020 Sony Corporation

Program Auto

Allows you to shoot with the exposure adjusted automatically (both the shutter speed and the aperture value).

You can set shooting functions such as [ISO].

1. **Set the mode dial to P (Program Auto).**
2. **Set the shooting functions to your desired settings.**
3. **Adjust the focus and shoot the subject.**

Program Shift

When you are not using a flash, you can change the shutter speed and aperture (F-value) combination without changing the appropriate exposure set by the camera.
Turn the front/rear dial to select the aperture value and shutter speed combination.

- “P” on the screen changes to “P*” when you turn the front/rear dial.
- To cancel program shift, set the shooting mode to other than [Program Auto], or turn off the camera.

Note

- According to the brightness of the environment, the program shift may not be used.
- Set the shooting mode to another one than “P” or turn off the power to cancel the setting you made.
- When the brightness changes, the aperture (F-value) and shutter speed also change while maintaining the shift amount.

5-021-326-12(1) Copyright 2020 Sony Corporation

Aperture Priority

You can shoot by adjusting the aperture and changing the range in focus, or by defocusing the background.

1. **Set the mode dial to A (Aperture Priority).**

2. **Select the desired value by turning the front/rear dial.**
   - Smaller F-value: The subject is in focus, but objects in front of and beyond the subject are blurred.
     Larger F-value: The subject and its foreground and background are all in focus.
   - If the aperture value you have set is not suitable for appropriate exposure, the shutter speed on the shooting screen will blink. If this happens, change the aperture value.

3. **Adjust the focus and shoot the subject.**

   The shutter speed is automatically adjusted to obtain proper exposure.

Note

- The brightness of the image on the screen may differ from the actual image being shot.

Related Topic

- Aperture Preview

5-021-326-12(1) Copyright 2020 Sony Corporation

Shutter Priority

You can express the movement of a moving subject in various ways by adjusting the shutter speed, for example, at the instant of the movement with high speed shutter, or as a trailing image with low speed shutter.

1. **Set the mode dial to S (Shutter Priority).**
2. **Select the desired value by turning the front/rear dial.**
   - If proper exposure cannot be obtained after setup, the aperture value on the shooting screen blinks. If this happens, change the shutter speed.
3. **Adjust the focus and shoot the subject.**

   The aperture is automatically adjusted to obtain proper exposure.

Hint

- Use a tripod to prevent camera-shake when you have selected a slow shutter speed.
- When you shoot indoor sports scenes, set the ISO sensitivity to a higher value.

Note

- The SteadyShot warning indicator does not appear in shutter speed priority mode.
- When [Long Exposure NR] is set to [On] and the shutter speed is 1 second(s) or longer, noise reduction will be done after shooting for the same amount of time that the shutter was open. However, you cannot shoot any more while noise reduction is in progress.
- The brightness of the image on the screen may differ from the actual image being shot.

Related Topic

- Long Exposure NR

5-021-326-12(1) Copyright 2020 Sony Corporation

Manual Exposure

You can shoot with the desired exposure setting by adjusting both the shutter speed and aperture.

1. **Set the mode dial to M (Manual Exposure).**

2. **Select the desired aperture value by turning the front dial.**
   Select the desired shutter speed by turning the rear dial.
   - You can change the setting of the front/rear dial using MENU → (Setup) → [Dial Customize] → [Dial Setup].
   - You can also set [ISO] to [ISO AUTO] in manual exposure mode. The ISO value automatically changes to achieve the appropriate exposure using the aperture value and shutter speed you have set.
   - When [ISO] is set to [ISO AUTO], the ISO value indicator will blink if the value you have set is not suitable for appropriate exposure. If this happens, change the shutter speed or aperture value.
   - When [ISO] is set to other than [ISO AUTO], use “M.M.” (Metered Manual)* to check the exposure value.
     Toward +: Images become brighter.
     Toward -: Images become darker.
     0: Appropriate exposure analyzed by the camera.
     * Indicates under/over for appropriate exposure. It is displayed using a numerical value on the monitor and with a metering indicator on the viewfinder.

3. **Adjust the focus and shoot the subject.**

Hint

- You can change the shutter speed and aperture (F-value) combination without changing the set exposure value by rotating the front/rear dial while pressing the AEL button. (Manual shift)

Note

- The Metered Manual indicator does not appear when [ISO] is set to [ISO AUTO].
- When the amount of ambient light exceeds the metering range of the Metered Manual, the Metered Manual indicator flashes.
- The SteadyShot warning indicator does not appear in manual exposure mode.
- The brightness of the image on the screen may differ from the actual image being shot.

Related Topic

- ISO (still image/movie)
- Bulb shooting

5-021-326-12(1) Copyright 2020 Sony Corporation

Bulb shooting

You can shoot a trailing image of the movement of a subject with long exposure.
Bulb shooting is suitable for shooting trails from stars or fireworks, etc.

1. **Set the mode dial to M (Manual Exposure).**
2. **Turn the rear dial clockwise until [BULB] is indicated.**
3. **Select the aperture value (F-value) using the front dial.**
4. **Press the shutter button halfway down to focus.**
5. **Press and hold the shutter button for the duration of the shooting.**

   As long as the shutter button is pressed, the shutter remains open.

Hint

- When shooting fireworks, etc., focus at infinity in manual focus mode. If you use a lens whose infinity point is unclear, adjust the focus on the fireworks in the area you want to focus on in advance.
- In order to perform bulb shooting without causing the image quality to deteriorate, we recommend that you start shooting while the camera is cool.
- During bulb shooting, images tend to blur. It is recommended that you use a tripod, a Bluetooth remote commander (sold separately) or a remote commander equipped with a lock function (sold separately). When using the Bluetooth remote commander, you can start bulb shooting by pressing the shutter button on the remote commander. To stop bulb shooting, press the shutter button on the remote commander again. To use the other remote commander, use the model which can be connected via the Multi/Micro USB terminal.

Note

- The longer the exposure time, the more noise will be visible on the image.
- When [Long Exposure NR] is set to [On], noise reduction is performed after shooting for the same duration that the shutter was open. You cannot shoot while noise reduction is in progress.
- You cannot set the shutter speed to [BULB] in the following situations:
  - When [Drive Mode] is set to the following:
    - [Cont. Shooting]
    - [Self-timer(Cont)]
    - [Cont. Bracket]
  - [Shutter Type] is set to [Electronic Shutter].

  If you use the above functions when the shutter speed is set to [BULB], the shutter speed is temporarily set to 30 seconds.

Related Topic

- Manual Exposure

- Long Exposure NR

5-021-326-12(1) Copyright 2020 Sony Corporation

Exposure Ctrl Type

You can select the method for setting the exposure (shutter speed and aperture) when shooting movies. With [P/A/S/M Mode], you can select from the P/A/S/M modes in the same way as the exposure mode for still images. With [Flexible Exp. Mode], you can switch between the automatic and manual settings separately for aperture value and shutter speed, like the exposure control system of a professional camera.

1. **MENU → (Shooting) → [Shooting Mode] → [Exposure Ctrl Type] → desired setting.**

Menu item details

P/A/S/M Mode:
Select the desired exposure mode from among [Program Auto], [Aperture Priority], [Shutter Priority], and [Manual Exposure].

Flexible Exp. Mode:
Sets the aperture value and shutter speed automatically (Auto) or manually (Manual).
You can switch between the automatic and manual settings using the assigned custom key, or change the aperture and shutter speed values by turning the front/rear dials.

Note

- Even if [Exposure Ctrl Type] is set to [Flexible Exp. Mode], when shooting a movie by pressing the MOVIE (movie) button in a still image shooting mode, the movie will be shot in the exposure mode for still image shooting.

Related Topic

- Movie: Exposure Mode
- Auto/Manual Swt. Set.

5-021-326-12(1) Copyright 2020 Sony Corporation

Interchangeable Lens Digital Camera
ILCE-7SM3 α7SIII

Auto/Manual Swt. Set.

When shooting movies, you can switch between the automatic and manual settings separately for aperture and shutter speed, as you would with the exposure control system of a professional camera. Set [Exposure Ctrl Type] to [Flexible Exp. Mode] beforehand.

1. **MENU → (Exposure/Color) → [Exposure] → [Auto/Manual Swt. Set.] → desired setting item.**

Menu item details

Av Auto/Manual Switch:
Switches the aperture value between [Auto] and [Manual].

Tv Auto/Manual Switch:
Switches the shutter speed between [Auto] and [Manual].

To switch between [Auto] and [Manual] using a custom keys

When [Exposure Ctrl Type] is set to [Flexible Exp. Mode], the following functions are assigned to the custom keys during movie recording.

- [Av Auto/Manual Switch]: C2 (Custom 2) button
- [Tv Auto/Manual Switch]: C1 (Custom 1) button

Each time you press the respective custom key, the aperture value or shutter speed switches between [Auto] and [Manual].
When [Auto] is selected, the proper exposure is set automatically, and when [Manual] is selected, the aperture value and shutter speed can be set with the following dials.

- Aperture value: rear dial
- Shutter speed: front dial

Note

- When you set the aperture value with the lens aperture ring, the aperture ring value takes priority over the dial value.

Related Topic

- Exposure Ctrl Type

5-021-326-12(1) Copyright 2020 Sony Corporation

Interchangeable Lens Digital Camera
ILCE-7SM3 α7SIII

Movie: Exposure Mode

You can set the exposure mode for movie shooting. The setting you have selected will be applied when [Exposure Ctrl Type] is set to [P/A/S/M Mode].

1. **Set the mode dial to (Movie).**
2. **MENU→ (Shooting) → [Shooting Mode] → [Exposure Mode] → desired setting.**
3. **Press the MOVIE (movie) button to start recording.**
   - Press the MOVIE button again to stop recording.

Menu item details

Program Auto:
Allows you to shoot with the exposure adjusted automatically (both the shutter speed and the aperture value).

Aperture Priority:
Allows you to shoot after adjusting the aperture value manually.

Shutter Priority:
Allows you to shoot after adjusting the shutter speed manually.

Manual Exposure:
Allows you to shoot after adjusting the exposure (both the shutter speed and the aperture value) manually.

Related Topic

- Exposure Ctrl Type

5-021-326-12(1) Copyright 2020 Sony Corporation

Interchangeable Lens Digital Camera
ILCE-7SM3 α7SIII

S&Q Motion: Exposure Mode

You can select the exposure mode for slow-motion/quick-motion shooting. The setting you have selected will be applied when [Exposure Ctrl Type] is set to [P/A/S/M Mode].
You can change the setting and playback speed for slow-motion/quick-motion shooting with [S&Q S&Q Settings].

1. **Set the mode dial to S&Q (S&Q Motion).**
2. **MENU → (Shooting) → [Shooting Mode] → [S&Q Exposure Mode] → desired setting.**
3. **Press the MOVIE (movie) button to start recording.**
   - Press the MOVIE button again to stop recording.

Menu item details

S&Q P Program Auto:
Allows you to shoot with the exposure adjusted automatically (both the shutter speed and the aperture value).

S&Q A Aperture Priority:
Allows you to shoot after adjusting the aperture value manually.

S&Q S Shutter Priority:
Allows you to shoot after adjusting the shutter speed manually.

S&Q M Manual Exposure:
Allows you to shoot after adjusting the exposure (both the shutter speed and the aperture value) manually.

Related Topic

- S&Q Settings
- Exposure Ctrl Type

5-021-326-12(1) Copyright 2020 Sony Corporation

Auto Slow Shutter

Sets whether or not to adjust the shutter speed automatically when recording movies if the subject is dark.

1. **MENU → (Exposure/Color) → [Exposure] → [Auto Slow Shutter] → desired setting.**

Menu item details

On:
Uses Auto Slow Shutter. The shutter speed automatically slows when recording in dark locations. You can reduce noise in the movie by using a slow shutter speed when recording in dark locations.

Off:
Does not use Auto Slow Shutter. The recorded movie will be darker than when [On] is selected, but you can record movies with smoother motion and less object blur.

Note

- [Auto Slow Shutter] does not function in the following situations:
  - During slow-motion/quick-motion shooting
  - (Shutter Priority)
  - (Manual Exposure)
  - When [ISO] is set to other than [ISO AUTO]
  - When [Exposure Ctrl Type] is set to [Flexible Exp. Mode] and the method for adjusting the shutter speed is set to [Manual]

5-021-326-12(1) Copyright 2020 Sony Corporation

Interchangeable Lens Digital Camera
ILCE-7SM3 α7SIII

Selecting the focus method (Focus Mode)

Selects the focus method to suit the movement of the subject.

1 MENU → AF/MF (Focus) → [AF/MF] → [Focus Mode] → desired setting.

Menu item details

AF-S Single-shot AF:
The product locks the focus once focusing is complete. Use this when the subject is motionless.

AF-A Automatic AF:
[Single-shot AF] and [Continuous AF] are switched according to the movement of the subject. When the shutter button is pressed halfway down, the product locks the focus when it determines that the subject is motionless, or continues to focus when the subject is in motion. During continuous shooting, the product automatically shoots with [Continuous AF] from the second shot.

AF-C Continuous AF:
The product continues to focus while the shutter button is pressed and held halfway down. Use this when the subject is in motion. In [Continuous AF] mode, there is no beep when the camera focuses.

DMF DMF:
You can make fine adjustments manually after performing auto focusing, letting you focus on a subject more quickly than when using [Manual Focus] from the beginning. This is convenient in situations such as macro shooting.

MF Manual Focus:
Adjusts the focus manually. If you cannot focus on the intended subject using auto focus, use [Manual Focus].

Focus indicator

● (lit):
The subject is in focus and the focus is locked.
● (flashing):
The subject is not in focus.
(lit):
The subject is in focus. The focus will be adjusted continuously according to the movements of the subject.
(lit):
Focusing is in progress.

Subjects on which it is difficult to focus using auto focus

- Dark and distant subjects
- Subjects with poor contrast
- Subjects seen through glass
- Fast-moving subjects
- Reflective light or shiny surfaces
- Flashing light
- Back-lit subjects
- Continuously repetitive patterns, such as the facades of buildings

- Subjects in the focusing area with different focal distances

Hint

- In [Continuous AF] mode, you can lock the focus by pressing and holding the button that has been assigned the [Focus Hold] function.
- When you set the focus to infinity in [Manual Focus] mode or [DMF] mode, make sure that the focus is on a sufficiently distant subject by checking the monitor or the viewfinder.

Note

- [Automatic AF] is available only when you are using a lens that supports phase detection AF.
- When [Continuous AF] or [Automatic AF] is set, the angle of view may change little by little while focusing. This does not affect the actual recorded images.
- Only [Continuous AF] and [Manual Focus] are available when shooting movies or when the mode dial is set to S&Q (S&Q Motion).

Related Topic

- Direct manual focus (DMF)
- Manual Focus
- Selecting the focus area (Focus Area)
- Assigning frequently used functions to buttons (Custom Key Setting)

5-021-326-12(1) Copyright 2020 Sony Corporation

Interchangeable Lens Digital Camera
ILCE-7SM3 α7SIII

Selecting the focus area (Focus Area)

Set the type of focusing frame when shooting with the auto focus. Select the mode according to the subject.

1. **MENU → AF/MF (Focus) → [Focus Area] → [Focus Area] → desired setting.**

Menu item details

Wide:
Focuses on a subject covering the whole range of the screen automatically. When you press the shutter button halfway down in the still image shooting mode, a green frame is displayed around the area that is in focus.

Zone:
Select a zone on the monitor on which to focus, and the product will automatically select a focus area.

Center Fix:
Focuses automatically on a subject in the center of the image. Use together with the focus-lock function to create the composition you want.

Spot: S/Spot: M/Spot: L:
Allows you to move the focusing frame to a desired point on the screen and focus on an extremely small subject in a narrow area.

Expand Spot:
If the product cannot focus on a single selected point, it uses focus points around the [Spot] as a secondary priority area for focusing.

Tracking:
This setting is available only when the [Focus Mode] is set to [Continuous AF]. When the shutter button is pressed and held halfway down, the product tracks the subject within the selected autofocus area. Point the cursor at [Tracking] on the [Focus Area] setting screen, and then select the desired area to start tracking using the left/right sides of the control wheel. You can also move the tracking start area to the desired point by designating the area as a [Tracking: Zone], [Tracking: Spot S]/[Tracking: Spot M]/[Tracking: Spot L] or [Tracking: Expand Spot].

Hint

- In the default settings, [Focus Area] is assigned to the C2 button.

Note

- [Focus Area] is locked to [Wide] in the following situations:
  - [Intelligent Auto]
- The focus area may not light up during continuous shooting or when the shutter button is pressed all the way down at once.
- When the mode dial is set to (Movie) or S&Q (S&Q Motion) or during movie shooting, [Tracking] cannot be selected as the [Focus Area].

Examples of the focusing frame display

The focusing frame differs as follows.

When focusing on a larger area

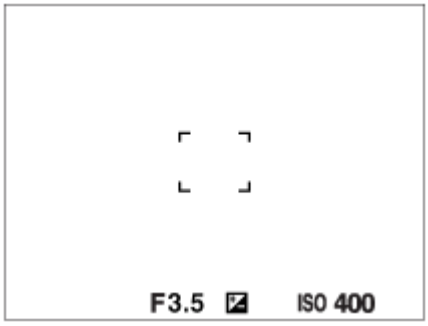

When focusing on a smaller area

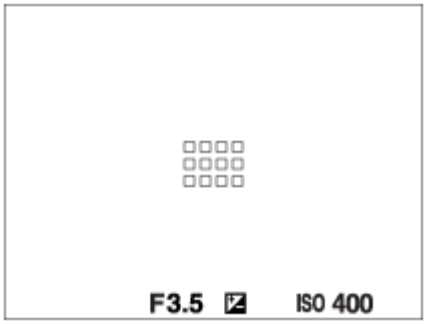

- When [Focus Area] is set to [Wide] or [Zone], the focusing frame may switch between “When focusing on a larger area” and “When focusing on a smaller area” depending on the subject or situation.
- When you attach an A-mount lens with a Mount Adaptor (LA-EA3 or LA-EA5) (sold separately), the focusing frame for “When focusing on a smaller area” may be displayed.

When focus is achieved automatically based on the whole range of the monitor

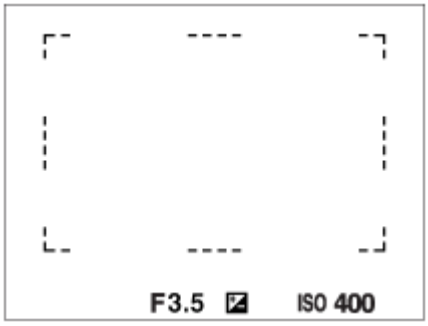

- When you use a zoom function other than the optical zoom, the [Focus Area] setting is disabled and the focusing frame is shown by the dotted line. The AF operates with priority on and around the center area.

To move the focus area

- You can move the focus area by operating the multi-selector when [Focus Area] is set to the following parameters:
  - [Zone]
  - [Spot: S]/[Spot: M]/[Spot: L]
  - [Expand Spot]
  - [Tracking: Zone]
  - [Tracking: Spot S]/[Tracking: Spot M]/[Tracking: Spot L]
  - [Tracking: Expand Spot]

If you assign [Focus Standard] to the center of the multi-selector beforehand, you can move the focusing frame back to the center of the monitor by pressing the center of the multi-selector.

Hint

- When [Focus Area] is set to [Spot] or [Expand Spot], you can move the focusing frame over a greater distance at a time with the multi-selector by setting [AF Frame Move Amt] to [Large].
- You can move the focusing frame quickly by touching and dragging it on the monitor. Set [Touch Operation] to [On], and set [Touch Func. in Shooting] to [Touch Focus] beforehand.

To track the subject temporarily (Tracking On)

You can temporarily change the setting for [Focus Area] to [Tracking] while you press and hold down the custom key to which you have assigned [Tracking On] in advance. The [Focus Area] setting before you activated [Tracking On] will switch to the equivalent [Tracking] setting.
For example:

[Focus Area] before you activate [Tracking On]	[Focus Area] while [Tracking On] is active
[Wide]	[Tracking: Wide]
[Spot: S]	[Tracking: Spot S]
[Expand Spot]	[Tracking: Expand Spot]

Phase detection AF

When there are phase detection AF points within the auto focus area, the product uses the combined autofocus of the phase detection AF and contrast AF.

Note

- Phase detection AF is available only when a compatible lens is attached. If you use a lens that does not support phase detection AF, you cannot use the following functions.

  — [Automatic AF]
  — [AF Tracking Sensitivity]
  — [AF Subj. Shift Sensitivity]
  — [AF Transition Speed]

  Also, even if you use a previously purchased applicable lens, the phase detection AF might not function unless you update the lens.

Related Topic

- Selecting the focus method (Focus Mode)
- Touch Operation
- Touch Func. in Shooting: Touch Focus
- Adjusting the focus area settings to the camera’s orientation (horizontal/vertical) (Switch V/H AF Area)
- Registering the current focus area (AF Area Registration)

5-021-326-12(1) Copyright 2020 Sony Corporation

Interchangeable Lens Digital Camera
ILCE-7SM3 α7SIII

Tracking subject (Tracking function)

This camera has the function of tracking which tracks the subject, and keeps marking it with the focusing frame.
You can set the start position to track by selecting from focusing areas, or by specifying by touch operation. The required function varies depending on the setting method.

- You can refer to the related functions under “Related Topic” at the bottom of this page.

Setting the start position to track by focusing area ([Tracking] under [Focus Area])

The selected focusing frame is set as the start position to track, and the tracking starts by pressing the shutter button halfway down.

- This function is available in still image shooting mode.
- This function is available when [Focus Mode] is set to [Continuous AF].

Setting the start position to track by touch operation ([Touch Tracking] under [Touch Func. in Shooting])

You can set the subject to track by touching it on the monitor.

- This function is available in still image shooting mode and movie shooting mode.
- This function is available when [Focus Mode] is set to [Single-shot AF], [Automatic AF], [Continuous AF], or [DMF].

Changing the setting for [Focus Area] to [Tracking] temporarily ([Tracking On] under [Custom Key Setting])

Even [Focus Area] is set to other than [Tracking], you can temporarily change the setting for [Focus Area] to [Tracking] while pressing and holding the key to which you have assigned [Tracking On] function.

- Assign the [Tracking On] function to a desired key using [Custom Key Setting] in advance.
- This function is available in still image shooting mode.
- This function is available when [Focus Mode] is set to [Continuous AF].

Related Topic

- Selecting the focus method (Focus Mode)
- Selecting the focus area (Focus Area)
- Touch Func. in Shooting:Touch Tracking
- Assigning frequently used functions to buttons (Custom Key Setting)

5-021-326-12(1) Copyright 2020 Sony Corporation

Interchangeable Lens Digital Camera
ILCE-7SM3 α7SIII

Focusing on human eyes

The camera can automatically detect faces and eyes and focus on the eyes (Eye AF). The following explanation is for cases where the detection target is human. The faces of up to 8 subjects can be detected.
There are two methods for performing [Eye AF], with some differences between their specifications. Select the appropriate method according to your purpose.

Item	[Face/Eye Prior. in AF] function	[Eye AF] via a custom key
Characteristics	The camera will detect faces/eyes with greater priority.	The camera will detect faces/eyes exclusively.
Advance preparation	● Select [Face/Eye Prior. in AF] → [On]. ● Select [Face/Eye Subject] → [Human].	Assign [Eye AF] to the desired key using [Custom Key Setting] or [Custom Key Setting].
How to perform [Eye AF]	Press the shutter button halfway down.	Press the key to which you have assigned the [Eye AF] function*.
Function details	● When the camera detects a face or eye inside or around the designated focus area, it focuses on the face or eye with greater priority. ● If the camera does not detect any faces or eyes inside or around the designated focus area, it will focus on another detectable subject.	● The camera focuses exclusively on faces or eyes anywhere on the screen, regardless of the setting for [Focus Area]. ● The camera will not automatically focus on another subject if no face or eye is detected anywhere on the screen.
Focus mode	Follows the setting designated with [Focus Mode]	Follows the setting designated with [Focus Mode]
Focus area	Follows the setting designated with [Focus Area]	The focus area temporarily becomes the entire screen, regardless of the setting for [Focus Area].

* Regardless of whether [Face/Eye Prior. in AF] is set to [On] or [Off], you can use [Eye AF] via a custom key while you are pressing the custom key to which you have assigned [Eye AF].

[Eye AF] by custom key

The Eye AF function can be used by assigning [Eye AF] to a custom key. The camera can focus on eyes as long as you are pressing the key. This is useful when you want to temporarily apply the Eye AF function to the entire screen regardless of the setting for [Focus Area].
The camera does not focus automatically if no faces or eyes are detected.
(Note: When you try to focus on eyes by pressing the shutter button halfway down, the camera only detects faces or eyes inside or around the focus area designated with [Focus Area]. If the camera detects no faces or eyes, it performs normal auto-focusing.)

1. MENU → (Setup) → [Operation Customize] → [Custom Key Setting] or [Custom Key Setting] → desired key, then assign the [Eye AF] function to the key.
2. MENU → AF/MF (Focus) → [Face/Eye AF] → [Face/Eye Subject] → [Human].

3. Point the camera at the face of a human, and press the key to which you have assigned the [Eye AF] function. To shoot a still image, press the shutter button while pressing the key.

To focus on the eyes of an animal

Set [Face/Eye Subject] to [Animal] before shooting. If the detection target is an animal, eyes can be detected only when shooting still images. Animal faces are not detected.

Note

- The [Eye AF] function may not function very well in the following situations:
  - When the person is wearing sunglasses.
  - When the front hair covers the person's eyes.
  - In low-light or back-lit conditions.
  - When the eyes are closed.
  - When the subject is in the shade.
  - When the subject is out of focus.
  - When the subject is moving too much

  There are also other situations in which it may not be possible to focus on the eyes.
- When the camera cannot focus on human eyes, it will detect and focus on the face instead. The camera cannot focus on eyes when no human faces are detected.
- The camera may not detect faces at all or may accidentally detect other objects as faces in some conditions.

Related Topic

- Face/Eye Prior. in AF (still image/movie)
- Face/Eye Subject (still image/movie)
- Right/Left Eye Select (still image/movie)
- Selecting the focus method (Focus Mode)
- Selecting the focus area (Focus Area)

5-021-326-12(1) Copyright 2020 Sony Corporation

Interchangeable Lens Digital Camera
ILCE-7SM3 α7SIII

Face/Eye Prior. in AF (still image/movie)

Sets whether or not the camera detects faces or eyes inside the focus area while performing autofocus, and then focuses on the eyes automatically (Eye AF).

1. **MENU → AF/MF (Focus) → [Face/Eye AF] → [Face/Eye Prior. in AF] → desired setting.**

Menu item details

On:
Focuses on the faces or eyes with priority if there are faces or eyes inside or around the designated focus area.

Off:
Does not prioritize faces or eyes when performing auto-focusing.

Hint

- By combining the [Face/Eye Prior. in AF] function with [Focus Area] → [Tracking], you can maintain focus on a moving eye or face.
- When [Face/Eye Priority Select] is assigned to the desired key using [Custom Key Setting] or [Custom Key Setting], you can switch the [Face/Eye Prior. in AF] function on or off by pressing the key.

Note

- If the camera does not detect any faces or eyes inside or around the designated focus area, it will focus on another detectable subject.
- When the shooting mode is set to [Intelligent Auto], [Face/Eye Prior. in AF] is locked to [On].

Related Topic

- Focusing on human eyes
- Face/Eye Subject (still image/movie)
- Right/Left Eye Select (still image/movie)
- Assigning frequently used functions to buttons (Custom Key Setting)

5-021-326-12(1) Copyright 2020 Sony Corporation

Interchangeable Lens Digital Camera
ILCE-7SM3 α7SIII

Face/Eye Subject (still image/movie)

Selects the target to be detected with the Face/Eye AF function.

1 **MENU → AF/MF (Focus) → [Face/Eye AF] → [Face/Eye Subject] → desired setting.**

Menu item details

Human:
Detects human faces/eyes.

Animal:
Detects animal eyes.

Hint

- To detect animal eyes, arrange the composition so that both eyes and the nose of the animal are within the angle of view. Once you focus on the animal's face, the animal's eyes will be detected more easily.

Note

- When [Face/Eye Subject] is set to [Animal], the following functions cannot be used.
  - Face Priority in Multi Metering
  - Regist. Faces Priority
  - Eye detection function during movie recording
- Even when [Face/Eye Subject] is set to [Animal], the eyes of some types of animals cannot be detected.

Related Topic

- Focusing on human eyes
- Face/Eye Prior. in AF (still image/movie)

5-021-326-12(1) Copyright 2020 Sony Corporation

Interchangeable Lens Digital Camera
ILCE-7SM3 α7SIII

Right/Left Eye Select (still image/movie)

Sets whether to focus on the left eye or right eye when [Face/Eye Subject] is set to [Human].

1. **MENU → AF/MF (Focus) → [Face/Eye AF] → [Right/Left Eye Select] → desired setting.**

Menu item details

Auto:
The camera automatically detects either the left eye or right eye.
Right Eye:
The right eye of the subject (the eye on the left side from the photographer's perspective) is detected.
Left Eye:
The left eye of the subject (the eye on the right side from the photographer's perspective) is detected.

[Switch Right/Left Eye] by custom key

You can also switch the eye to be detected by pressing the custom key.
When [Right/Left Eye Select] is set to [Right Eye] or [Left Eye], you can switch the eye to be detected by pressing the custom key to which you have assigned the [Switch Right/Left Eye] function.
When [Right/Left Eye Select] is set to [Auto], you can temporarily switch the eye to be detected by pressing the custom key to which you have assigned the [Switch Right/Left Eye] function.
The temporary left/right selection is cancelled when you perform the following operations, etc. The camera returns to automatic eye detection.

- Pressing the center of the control wheel
- Pressing the center of the multi-selector
- Stopping pressing the shutter button halfway down (only during still image shooting)
- Stopping pressing the custom key to which [AF On] or [Eye AF] is assigned (only during still image shooting)
- Pressing the MENU button

Hint

- The eye detection frame is displayed when [Right/Left Eye Select] is set to [Right Eye] or [Left Eye], or when [Switch Right/Left Eye] is executed with the custom key. During movie recording, the eye detection frame will be displayed when [Face/Eye Frame Disp.] is set to [On], even if [Auto] is selected in [Right/Left Eye Select].

Related Topic

- Focusing on human eyes
- Face/Eye Prior. in AF (still image/movie)
- Face/Eye Subject (still image/movie)
- Face/Eye Frame Disp. (still image/movie)

5-021-326-12(1) Copyright 2020 Sony Corporation

Interchangeable Lens Digital Camera
ILCE-7SM3 α7SIII

Face/Eye Frame Disp. (still image/movie)

Sets whether or not to display the face/eye detection frame when a face or eyes are detected.

1. **MENU → AF/MF (Focus) → [Face/Eye AF] → [Face/Eye Frame Disp.] → desired setting.**

Menu item details

On:
Displays a detection frame when a face or eyes are detected.

Off:
Does not display a detection frame when a face or eyes are detected.

Face detection frame

When the camera detects a face, the gray face-detection frame appears. The frame color will be reddish purple if the detected face has been registered using the [Face Memory] function.
The face detection frame turns white when the face is detected inside or around the focus area, and the camera determines that autofocus is enabled.

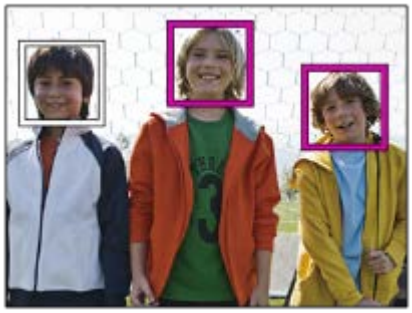

Eye detection frame

A white eye detection frame appears when an eye is detected and the camera determines that autofocusing is possible, depending on the settings.
The eye detection frame is displayed as follows when [Face/Eye Subject] is set to [Animal].

Hint

- If you want the face or eye detection frame to disappear within a certain period of time after the camera has focused on the face or eye, set [AF Area Auto Clear] to [On].

Note

- If the subject is moving too much, the detection frame may not be displayed correctly over their eyes.
- The eye detection frame is not displayed when the Eye AF function is unavailable.
- Even if [Face/Eye Frame Disp.] is set to [Off], a green focusing frame will be displayed over faces or eyes that are in focus.

Related Topic

- Focusing on human eyes
- Face/Eye Prior. in AF (still image/movie)
- Face/Eye Subject (still image/movie)
- Right/Left Eye Select (still image/movie)
- Face Memory

5-021-326-12(1) Copyright 2020 Sony Corporation

Interchangeable Lens Digital Camera
ILCE-7SM3 α7SIII

Face Memory

Sets personal face data. If you register faces in advance, the product can focus on the registered face as a priority.
Up to eight faces can be registered.

1 **MENU → AF/MF (Focus) → [Face/Eye AF] → [Face Memory] → desired setting item.**

Menu item details

New Registration:
Shoots and registers faces.

Order Exchanging:
When multiple faces are registered, the order of priority for the registered face data can be changed.

Delete:
Deletes registered faces one by one.

Delete All:
Deletes all registered faces at once.

Note

- When performing [New Registration], shoot the face from the front in a brightly lit place. The face may not be registered correctly if it is obscured by a hat, a mask, sunglasses, etc.
- Even if you execute [Delete], the data for registered face will remain in the product. To delete the data for registered faces from the product, select [Delete All].

Related Topic

- Regist. Faces Priority (still image/movie)

5-021-326-12(1) Copyright 2020 Sony Corporation

Regist. Faces Priority (still image/movie)

Sets whether to focus with higher priority on faces registered using [Face Memory].

1. **MENU → AF/MF (Focus) → [Face/Eye AF] → [Regist. Faces Priority] → desired setting.**

Menu item details

On:
Focuses with higher priority on faces registered using [Face Memory].

Off:
Focuses without giving higher priority to registered faces.

Hint

- To use the [Regist. Faces Priority] function, set as follows.
  - [Face/Eye Prior. in AF] under [Face/Eye AF]: [On]
  - [Face/Eye Subject] under [Face/Eye AF]: [Human]

Related Topic

- Face/Eye Prior. in AF (still image/movie)
- Face Memory

5-021-326-12(1) Copyright 2020 Sony Corporation

Focus Standard

If you press the key to which [Focus Standard] is assigned, you can recall useful functions such as automatically focusing on a subject in the center of the screen in accordance with the focus area settings.

1. **MENU → (Setup) → [Operation Customize] → [Custom Key Setting] or [Custom Key Setting] → desired key, then assign the [Focus Standard] function to the key.**
2. **Press the key to which [Focus Standard] is assigned.**
   - What you can do by pressing the key varies depending on the setting for [Focus Area].

Examples of [Focus Standard] key functions

- When [Focus Area] is set to any of the following parameters, pressing the key moves the focusing frame back to the center:
  - [Zone]
  - [Spot: S]/[Spot: M]/[Spot: L]
  - [Expand Spot]
  - [Tracking: Zone]
  - [Tracking: Spot S]/[Tracking: Spot M]/[Tracking: Spot L]
  - [Tracking: Expand Spot]
- When [Focus Area] is set to [Wide], [Center Fix], [Tracking: Wide], or [Tracking: Center Fix], pressing the key in the autofocus mode makes the camera focus on the center of the screen. If you press the key while recording a movie with manual focus, you can temporarily switch to autofocus and focus on the center of the screen.

Note

- You cannot set the [Focus Standard] function to [Left Button], [Right Button] or [Down Button] of the control wheel.

Related Topic

- Assigning frequently used functions to buttons (Custom Key Setting)
- Selecting the focus area (Focus Area)

5-021-326-12(1) Copyright 2020 Sony Corporation

Interchangeable Lens Digital Camera
ILCE-7SM3 α7SIII

Adjusting the focus area settings to the camera's orientation (horizontal/vertical) (Switch V/H AF Area)

You can set whether to switch the [Focus Area] and the position of the focusing frame according to the orientation of the camera (horizontal/vertical). This function is useful when shooting scenes for which you have to change the camera position frequently, such as portraits or sports scenes.

1. **MENU → AF/MF (Focus) → [Focus Area] → [Switch V/H AF Area] → desired setting.**

Menu item details

Off:
Does not switch the [Focus Area] and the position of the focusing frame according to the orientation of the camera (horizontal/vertical).

AF Point Only:
Switches the position of the focusing frame according to the orientation of the camera (horizontal/vertical). The [Focus Area] is fixed.

AF Point + AF Area:
Switches both the [Focus Area] and the position of the focusing frame according to the orientation of the camera (horizontal/vertical).

An example when [AF Point + AF Area] is selected

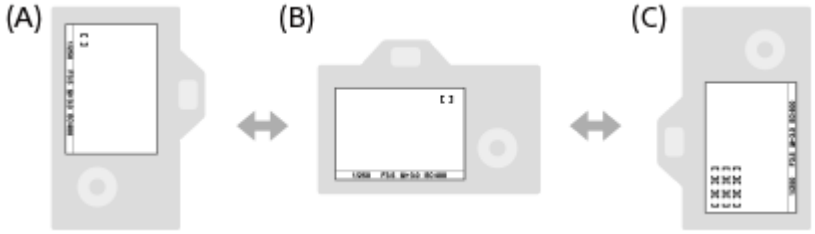

(A) Vertical: [Spot] (Upper left corner)
(B) Horizontal: [Spot] (Upper right corner)
(C) Vertical: [Zone] (Lower left corner)

- Three camera orientations are detected: horizontal, vertical with the side of the shutter button facing up, and vertical with the side of the shutter button facing down.

Note

- If the setting for [Switch V/H AF Area] is changed, the focus settings for each camera orientation will not be retained.
- The [Focus Area] and the position of the focusing frame will not change even when [Switch V/H AF Area] is set to [AF Point + AF Area] or [AF Point Only] in the following situations:
  - When the shooting mode is set to [Intelligent Auto]
  - While the shutter button is pressed halfway down
  - During movie shooting
  - While using the digital zoom function
  - While the auto-focusing is activated
  - During continuous shooting
  - During the countdown for the self-timer

- When [Focus Magnifier] is activated

- When you shoot images right after the power is turned on and the camera is vertical, the first shot is taken with the horizontal focus setting or with the last focus setting.
- The orientation of the camera cannot be detected when the lens is facing up or down.

Related Topic

- Selecting the focus area (Focus Area)

5-021-326-12(1) Copyright 2020 Sony Corporation

Interchangeable Lens Digital Camera
ILCE-7SM3 α7SIII

Registering the current focus area (AF Area Registration)

You can move the focusing frame to a preassigned position temporarily using a custom key. This function is useful when shooting scenes in which the subject's movements are predictable; for example, sports scenes. With this function, you can switch the focus area quickly according to the situation.

How to register focus area

1. MENU → AF/MF (Focus) → [Focus Area] → [AF Area Registration] → [On].
2. Set the focus area to the desired position and then hold down the Fn (Function) button.

How to call up the registered focus area

1. MENU → (Setup) → [Operation Customize] → [Custom Key Setting] → desired key, then select [Regist. AF Area hold].
2. Set the camera to the shooting mode, hold down the key to which [Regist. AF Area hold] has been assigned and then press the shutter button to shoot images.

Hint

- When a focusing frame is registered using [AF Area Registration], the registered focusing frame flashes on the monitor.
- If you assign [Regist AF Area tggle] to a custom key, you can use the registered focusing frame without holding down the key.
- If [Reg. AF Area+AF On] is assigned to a custom key, auto focusing using the registered focusing frame is performed when the key is pressed.

Note

- A focus area cannot be registered in the following situations:
  - While [Touch Focus] is being performed
  - While using the digital zoom function
  - While [Touch Tracking] is being performed
  - While focusing
  - While performing focus lock
- You cannot assign [Regist. AF Area hold] to [Left Button], [Right Button], or [Down Button].
- You cannot call up the registered focus area in the following situations:
  - The mode dial is set to either AUTO (Auto Mode), (Movie) or S&Q (S&Q Motion)
- When [AF Area Registration] is set to [On], the [Lock Operation Parts] setting is locked to [Off].

Related Topic

- Selecting the focus area (Focus Area)
- Deleting a registered AF Area (Del. Regist. AF Area)
- Assigning frequently used functions to buttons (Custom Key Setting)

5-021-326-12(1) Copyright 2020 Sony Corporation

Deleting a registered AF Area (Del. Regist. AF Area)

Deletes the focusing frame position that was registered using [AF Area Registration].

1. **MENU → AF/MF (Focus) → [Focus Area] → [Del. Regist. AF Area].**

Related Topic

- Registering the current focus area (AF Area Registration)

5-021-326-12(1) Copyright 2020 Sony Corporation

Interchangeable Lens Digital Camera
ILCE-7SM3 α7SIII

Focus Area Limit (still image/movie)

By limiting the types of available focus area settings in advance, you can more quickly select settings for [Focus Area].

1. **MENU → (Focus) → [Focus Area] → [Focus Area Limit] → Add check marks to the focus areas that you want to use, and then select [OK].**

   The types of focus areas marked with ✓ (check mark) will be available as settings.

Hint

- When you assign [Switch Focus Area] to a desired key using [Custom Key Setting] or [Custom Key Setting], the focus area changes every time you press the assigned key. By limiting the types of selectable focus areas with [Focus Area Limit] in advance, you can more quickly select the focus area setting you want.

Note

- Types of focus areas that do not have a check mark cannot be selected using MENU or the Fn (function) menu. To select one, add a check mark using [Focus Area Limit].
- If you remove the check mark for a focus area registered with [Switch V/H AF Area] or [AF Area Registration], the registered settings will change.

Related Topic

- Selecting the focus area (Focus Area)
- Assigning frequently used functions to buttons (Custom Key Setting)

5-021-326-12(1) Copyright 2020 Sony Corporation

Interchangeable Lens Digital Camera
ILCE-7SM3 α7SIII

Circ. of Focus Point (still image/movie)

Sets whether to allow the focusing frame to jump from one end to the other when you move the focusing frame. This function is useful when you want to move the focusing frame from one end to the other quickly.
The function can be used when the following settings are selected for [Focus Area].

- [Zone]
- [Spot: S]/[Spot: M]/[Spot: L]
- [Expand Spot]
- [Tracking: Zone]
- [Tracking: Spot S]/[Tracking: Spot M]/[Tracking: Spot L]
- [Tracking: Expand Spot]

1 **MENU → AF/MF (Focus) → [Focus Area] → [Circ. of Focus Point] → desired setting.**

When [Circulate] is selected:

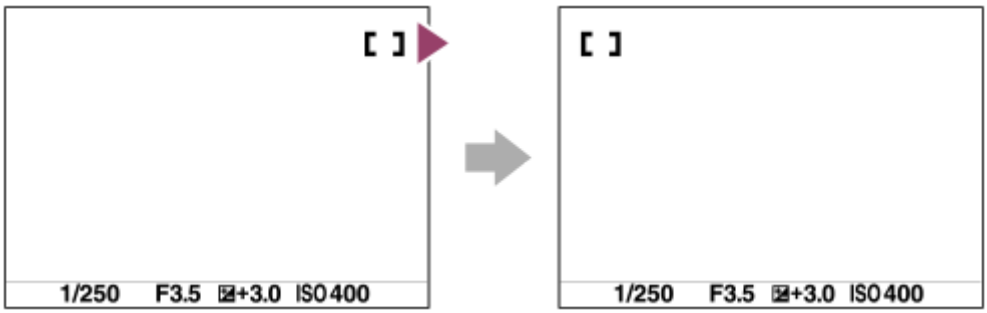

Menu item details

Does Not Circulate:
The cursor does not move when you try to move the focusing frame past the end.

Circulate:
The cursor jumps to the opposite end when you try to move the focusing frame past the end.

Note

- Even if you set [Circ. of Focus Point] to [Circulate], the focusing frame will not circulate diagonally.

Related Topic

- Selecting the focus area (Focus Area)

5-021-326-12(1) Copyright 2020 Sony Corporation

Interchangeable Lens Digital Camera
ILCE-7SM3 α7SIII

AF Frame Move Amt (still image/movie)

Sets the distance by which the focusing frame is moved when [Focus Area] is set to [Spot], etc. You can quickly move the focusing frame by increasing the distance, such as in situations where the subject is moving a lot.

1. **MENU → AF/MF (Focus) → [Focus Area] → [AF Frame Move Amt] → desired setting.**

Menu item details

Standard:
The focusing frame moves by the standard distance.

Large:
The focusing frame moves over a greater distance at a time than with [Standard].

Hint

- When [Swt. AF Frame Move hold] is assigned to the desired key using [Custom Key Setting] or [Custom Key Setting], the [AF Frame Move Amt] setting temporarily switches while the key is pressed.
- If any of the following functions is assigned to the control wheel using [Custom Key Setting] or [Custom Key Setting], you can move the focusing frame by the distance determined for each function, regardless of the setting for [AF Frame Move Amt].
  - [Move AF Frame ↔ : L]
  - [Move AF Frame ↕ : L]
  - [Move AF Frame ↔ : Std]
  - [Move AF Frame ↕ : Std]
- If any of the following functions is assigned to the front/rear dials or control wheel using [My Dial Settings], you can move the focusing frame by the distance determined for each function, regardless of the setting for [AF Frame Move Amt].
  - [Move AF Frame ↔ : L]
  - [Move AF Frame ↕ : L]
  - [Move AF Frame ↔ : Std]
  - [Move AF Frame ↕ : Std]

Related Topic

- Selecting the focus area (Focus Area)
- Assigning frequently used functions to buttons (Custom Key Setting)

5-021-326-12(1) Copyright 2020 Sony Corporation

Interchangeable Lens Digital Camera
ILCE-7SM3 α7SIII

Focus Area Color (still image/movie)

You can specify the color of the frame indicating the focusing area. If the frame is difficult to see because of the subject, make it more visible by changing its color.

1. **MENU → AF/MF (Focus) → [Focus Area] → [Focus Area Color] → desired color.**

Menu item details

White:
Displays the frame indicating the focusing area in white.

Red:
Displays the frame indicating the focusing area in red.

Related Topic

- Selecting the focus area (Focus Area)

5-021-326-12(1) Copyright 2020 Sony Corporation

Interchangeable Lens Digital Camera
ILCE-7SM3 α7SIII

AF Area Auto Clear

Sets whether the focus area should be displayed all the time or should disappear automatically shortly after focus is achieved.

1 **MENU → AF/MF (Focus) → [Focus Area] → [AF Area Auto Clear] → desired setting.**

Menu item details

On:
The focus area disappears automatically shortly after focus is achieved.

Off:
The focus area is displayed all the time.

Related Topic

- Selecting the focus area (Focus Area)

5-021-326-12(1) Copyright 2020 Sony Corporation

Interchangeable Lens Digital Camera
ILCE-7SM3 α7SIII

AF-C Area Display

You can set whether or not to display the area that is in focus when [Focus Area] is set to [Wide] or [Zone], in [Continuous AF] mode.

1. **MENU → (Focus) → [Focus Area] → [AF-C Area Display] → desired setting.**

Menu item details

On:
Displays the focus area that is in focus.
Off:
Does not display the focus area that is in focus.

Note

- When [Focus Area] is set to one of the following, the focusing frames in the area that is in focus turn green:
  - [Center Fix]
  - [Spot]
  - [Expand Spot]

Related Topic

- Selecting the focus area (Focus Area)

5-021-326-12(1) Copyright 2020 Sony Corporation

Interchangeable Lens Digital Camera
ILCE-7SM3 α7SIII

Phase Detect. Area

Sets whether or not to display the Phase Detection AF area.

1 **MENU → AF/MF (Focus) → [Focus Area] → [Phase Detect. Area] → desired setting.**

Menu item details

On:
Displays the Phase Detection AF area.

Off:
Does not display the Phase Detection AF area.

Note

- Phase Detection AF is available only with compatible lenses. If an incompatible lens is attached, you will be unable to use Phase Detection AF. Phase Detection AF may not operate even with some compatible lens, such as lenses purchased in the past that have not been updated. For details on compatible lenses, visit the Sony web site in your area, or consult your Sony dealer or local authorized Sony service facility.
- When shooting images using a full-frame-size-compatible lens, the Phase Detection AF area will not be displayed even if [Phase Detect. Area] is set to [On].
- When recording movies, the Phase Detection AF area will not be displayed.

5-021-326-12(1) Copyright 2020 Sony Corporation

AF Tracking Sensitivity

You can select the AF track sensitivity when the subject goes out of focus in still image mode.

1. **MENU → AF/MF (Focus) → [AF/MF] → [AF Tracking Sensitivity] → desired setting.**

Menu item details

5(Responsive)/4/3(Standard)/2/1(Locked on):
Select [5(Responsive)] to focus responsively on subjects at different distances.
Select [1(Locked on)] to keep the focus on a specific subject when other things are crossing in front of the subject.

5-021-326-12(1) Copyright 2020 Sony Corporation

AF Transition Speed

Sets the speed at which the focus position is moved when the target of the auto focus is switched during movie shooting.

1. **MENU → AF/MF (Focus) → [AF/MF] → [AF Transition Speed] → desired setting.**

Menu item details

7 (Fast)/6/5/4/3/2/1 (Slow):
Select a faster value to focus on the subject more quickly.
Select a slower value to focus on the subject more smoothly.

5-021-326-12(1) Copyright 2020 Sony Corporation

Interchangeable Lens Digital Camera
ILCE-7SM3 α7SIII

AF Subj. Shift Sensitivity

Sets the sensitivity with which the focus switches to another subject when the original subject leaves the focus area during movie shooting.

1. **MENU → AF/MF (Focus) → [AF/MF] → [AF Subj. Shift Sensitivity] → desired setting.**

Menu item details

5(Responsive)/4/3/2/1(Locked on):
Select a higher value when you want to shoot a quick-moving subject, or when you want to shoot multiple subjects while switching the focus continually.
Select a lower value when you want the focus to remain steady, or when you want to keep the focus on a particular target without being affected by other subjects.

5-021-326-12(1) Copyright 2020 Sony Corporation

Interchangeable Lens Digital Camera
ILCE-7SM3 α7SIII

AF/MF Selector

You can easily switch the focusing mode from auto to manual and vice versa while shooting without changing your holding position.

1. **MENU → (Setup) → [Operation Customize] → [Custom Key Setting] or [Custom Key Setting] → desired button → [AF/MF Selector Hold] or [AF/MF Selector Toggle].**

Menu item details

AF/MF Selector Hold:
Switches the focusing mode while the button is held down.

AF/MF Selector Toggle:
Switches the focusing mode until the button is pressed again.

Note

- You cannot set the [AF/MF Selector Hold] function to [Left Button], [Right Button] or [Down Button] of the control wheel.

Related Topic

- Assigning frequently used functions to buttons (Custom Key Setting)

5-021-326-12(1) Copyright 2020 Sony Corporation

AF w/ Shutter

Selects whether to focus automatically when you press the shutter button halfway down. Select [Off] to adjust the focus and the exposure separately.

1. **MENU → AF/MF (Focus) → [AF/MF] → [AF w/ Shutter] → desired setting.**

Menu item details

On:
The auto focus operates when you press the shutter button halfway down.

Off:
The auto focus does not operate even if you press the shutter button halfway down.

Useful method to micro-adjust the focus

When an A-mount lens is attached, activating the auto focus function with a button other than the shutter button lets you focus more precisely in combination with manual focusing.

1. Set [AF w/ Shutter] to [Off].
2. MENU → (Setup) → [Operation Customize] → [Custom Key Setting] or [Custom Key Setting] → assign the [Focus Magnifier] function to the desired key.
3. Press the AF-ON button to focus.
4. Press the key to which the [Focus Magnifier] function is assigned, and then rotate the focus ring for micro-adjustments of the focus.
5. Press the shutter button fully down to shoot the image.

Related Topic

- AF On
- Focus Magnifier
- Pre-AF

5-021-326-12(1) Copyright 2020 Sony Corporation

Interchangeable Lens Digital Camera
ILCE-7SM3 α7SIII

AF On

You can focus without pressing the shutter button halfway down. The settings for [Focus Mode] will be applied.

1. **Press the AF-ON (AF On) button while shooting.**
   - When shooting a movie, you can perform auto-focusing while holding down the AF-ON button even in the manual focusing mode.

Hint

- Set [AF w/ Shutter] to [Off] when you do not want to perform auto focusing using the shutter button.
- Set [AF w/ Shutter] and [Pre-AF] to [Off] to focus at a specific shooting distance predicting the position of the subject.

Related Topic

- AF w/ Shutter
- Pre-AF

5-021-326-12(1) Copyright 2020 Sony Corporation

Interchangeable Lens Digital Camera
ILCE-7SM3 α7SIII

Focus Hold

Locks the focus while the key to which the Focus Hold function has been assigned is pressed.

1. **MENU → (Setup) → [Operation Customize] → [Custom Key Setting] or [Custom Key Setting] → assign the [Focus Hold] function to the desired key.**
2. **Focus and press the key to which the [Focus Hold] function has been assigned.**
3. **Press the shutter button while holding down the key.**

Related Topic

- Assigning frequently used functions to buttons (Custom Key Setting)

5-021-326-12(1) Copyright 2020 Sony Corporation

Pre-AF

The product automatically adjusts focus before you press the shutter button halfway down.

1. **MENU → AF/MF (Focus) → [AF/MF] → [Pre-AF] → desired setting.**

Menu item details

On:
Adjusts focus before you press the shutter button halfway down.

Off:
Does not adjust focus before you press the shutter button halfway down.

Note

- [Pre-AF] is available only when an E-mount lens is mounted.
- During focusing operations, the screen may shake.

5-021-326-12(1) Copyright 2020 Sony Corporation

Interchangeable Lens Digital Camera
ILCE-7SM3 α7SIII

Priority Set in AF-S

Sets whether to release the shutter even if the subject is not in focus when [Focus Mode] is set to [Single-shot AF], [DMF] or [Automatic AF] and the subject is remaining still.

1. **MENU → (Focus) → [AF/MF] → [Priority Set in AF-S] → desired setting.**

Menu item details

AF:
Prioritizes focusing. The shutter will not be released until the subject is in focus.

Release:
Prioritizes the shutter's release. The shutter will be released even if the subject is out of focus.

Balanced Emphasis:
Shoots with a balanced emphasis on both focusing and shutter release.

Related Topic

- Selecting the focus method (Focus Mode)
- Priority Set in AF-C

5-021-326-12(1) Copyright 2020 Sony Corporation

Interchangeable Lens Digital Camera
ILCE-7SM3 α7SIII

Priority Set in AF-C

Sets whether to release the shutter even if the subject is not in focus when the continuous AF is activated and the subject is in motion.

1. **MENU → AF/MF (Focus) → [AF/MF] → [Priority Set in AF-C] → desired setting.**

Menu item details

AF:
Prioritizes focusing. The shutter will not be released until the subject is in focus.

Release:
Prioritizes the shutter's release. The shutter will be released even if the subject is out of focus.

Balanced Emphasis:
Shoots with a balanced emphasis on both focusing and shutter release.

Related Topic

- Selecting the focus method (Focus Mode)
- Priority Set in AF-S

5-021-326-12(1) Copyright 2020 Sony Corporation

Interchangeable Lens Digital Camera
ILCE-7SM3 α7SIII

AF in Focus Mag.

You can focus on the subject more accurately using auto-focus by magnifying the area where you want to focus. While the magnified image is displayed, you can focus on a smaller area than the flexible spot.

1. **MENU → AF/MF (Focus) → [Focus Assistant] → [AF in Focus Mag.] → [On].**
2. **MENU → AF/MF (Focus) → [Focus Assistant] → [Focus Magnifier].**
3. **Magnify the image by pressing the center of the multi-selector, and then adjust the position by pressing the multi-selector up/down/left/right.**
   - The magnification scale changes each time you press the center.
4. **Press the shutter button halfway down to focus.**
   - The focus will be achieved at point of + (plus mark) in the center of the screen.
5. **Press the shutter button all the way down to shoot.**
   - The camera exits the magnified display after shooting.

Hint

- Use of a tripod is recommended to accurately identify the location you want to magnify.
- You can check the auto-focusing result by magnifying the displayed image. If you want to readjust the focus position, adjust the focus area on the magnified screen and then press the shutter button halfway down.

Note

- If you enlarge an area at the edge of the screen, the camera may not be able to focus.
- The exposure and white balance cannot be adjusted while the displayed image is being magnified.
- [AF in Focus Mag.] is unavailable in the following situations:
  - During movie shooting
  - When [Focus Mode] is set to [Continuous AF].
  - When [Focus Mode] is set to [Automatic AF] and the shooting mode is set to other than P/A/S/M.
  - When [Focus Mode] is set to [Automatic AF] and [Drive Mode] is set to [Cont. Shooting].
  - When using a Mount Adaptor (sold separately).
- While the displayed image is being magnified, the following functions are unavailable:
  - [Eye AF]
  - [Pre-AF]
  - [Face/Eye Prior. in AF]

Related Topic

- Focus Magnifier

5-021-326-12(1) Copyright 2020 Sony Corporation

Interchangeable Lens Digital Camera
ILCE-7SM3 α7SIII

AF Illuminator

The AF illuminator supplies fill light to focus more easily on a subject in dark surroundings. In the time between pressing the shutter button halfway down and locking the focus, the AF illuminator lights up to allow the camera to focus easily. If a flash with an AF illuminator function is attached to the Multi Interface Shoe, when the flash is turned on, the AF illuminator of the flash will turn on as well.

1. **MENU → AF/MF (Focus) → [AF/MF] → [AF Illuminator] → desired setting.**

Menu item details

Auto:
The AF illuminator lights up automatically in dark surroundings.

Off:
Does not use the AF illuminator.

Note

- You cannot use [AF Illuminator] in the following situations:
  - When the shooting mode is [Movie] or [S&Q Motion].
  - When [Focus Mode] is set to [Continuous AF] or [Automatic AF] and the subject is moving (when the focus indicator / lights up).
  - When [Focus Magnifier] is activated.
  - When a Mount Adaptor is attached.
- The AF illuminator emits a very bright light. Although there is no health hazard, do not look directly into the AF illuminator at close range.

5-021-326-12(1) Copyright 2020 Sony Corporation

Aperture Drive in AF

Changes the aperture drive system to prioritize the auto-focusing tracking performance or to prioritize silence.

1. **MENU → AF/MF (Focus) → [AF/MF] → [Aperture Drive in AF] → desired setting.**

Menu item details

Focus Priority:
Changes the aperture drive system to prioritize auto-focusing performance.

Standard:
Uses the standard aperture drive system.

Silent Priority:
Changes the aperture drive system to prioritize silence so that the sound from the aperture drive is quieter than in [Standard].

Note

- When [Focus Priority] is selected, sound from the aperture drive may be audible, or the aperture effect may not be visible on the monitor. To avoid these phenomena, change the setting to [Standard].
- When [Silent Priority] is selected, the focusing speed may become slower, and it may be more difficult to focus on a subject.
- The effect may differ depending on the lens you use and the shooting conditions.

Related Topic

- Silent Mode Settings (still image/movie)

5-021-326-12(1) Copyright 2020 Sony Corporation

Interchangeable Lens Digital Camera
ILCE-7SM3 α7SIII

Manual Focus

When it is difficult to focus properly in the autofocus mode, you can adjust the focus manually.

1. **MENU → AF/MF (Focus) → [AF/MF] → [Focus Mode] → [Manual Focus].**
2. **Rotate the focusing ring to achieve sharp focus.**
   - When you rotate the focusing ring, the focus distance is displayed on the screen.
     The focus distance is not displayed when the Mount Adaptor (sold separately) is attached.
3. **Press the shutter button fully down to shoot an image.**

Note

- When you use the viewfinder, adjust the diopter level to obtain the correct focus on the viewfinder.
- The displayed focus distance is just a reference.

Related Topic

- Direct manual focus (DMF)
- Auto Magnifier in MF
- Focus Magnifier
- Peaking Display

5-021-326-12(1) Copyright 2020 Sony Corporation

Interchangeable Lens Digital Camera
ILCE-7SM3 α7SIII

Direct manual focus (DMF)

You can make fine adjustments manually after performing auto focusing, letting you focus on a subject more quickly than when using the manual focus from the beginning. This is convenient in situations such as macro shooting.

1. **MENU → AF/MF (Focus) → [AF/MF] → [Focus Mode] → [DMF].**
2. **Press the shutter button halfway down to focus automatically.**
3. **Keep the shutter button pressed halfway down, and then rotate the focusing ring to achieve a sharper focus.**
   - When you rotate the focusing ring, the focus distance is displayed on the screen.
     The focus distance is not displayed when the Mount Adaptor (sold separately) is attached.
4. **Press the shutter button fully down to shoot an image.**

Related Topic

- Manual Focus
- Peaking Display

5-021-326-12(1) Copyright 2020 Sony Corporation

Auto Magnifier in MF

Enlarges the image on the screen automatically to make manual focusing easier. This works in Manual Focus or Direct Manual Focus shooting.

1. **MENU → AF/MF (Focus) → [Focus Assistant] → [Auto Magnifier in MF] → [On].**
2. **Turn the focus ring to adjust the focus.**
   - The image is enlarged. You can magnify images further by pressing the center of the control wheel.

Hint

- You can set how long the image is to be shown magnified by selecting MENU → AF/MF (Focus) → [Focus Assistant] → [Focus Magnif. Time].

Note

- You cannot use [Auto Magnifier in MF] when shooting movies. Use the [Focus Magnifier] function instead.
- [Auto Magnifier in MF] is not available when a Mount Adaptor is attached. Use the [Focus Magnifier] function instead.

Related Topic

- Manual Focus
- Direct manual focus (DMF)
- Focus Magnif. Time (still image/movie)

5-021-326-12(1) Copyright 2020 Sony Corporation

Interchangeable Lens Digital Camera
ILCE-7SM3 α7SIII

Focus Magnifier

You can check the focus by enlarging the image before shooting.
Unlike with [Auto Magnifier in MF], you can magnify the image without operating the focus ring.

1. **MENU → AF/MF (Focus) → [Focus Assistant] → [Focus Magnifier].**

2. **Press the center of the multi-selector to enlarge the image and select the area you want to enlarge by pressing the multi-selector up/down/left/right.**
   - Each time you press the center, the magnification scale will change.
   - You can set the initial magnification by selecting MENU → AF/MF (Focus) → [Focus Assistant] → [Initial Focus Mag.] or [Initial Focus Mag.].

3. **Confirm the focus.**
   - Press the (Delete) button to bring the magnified position into the center of an image.
   - When the focus mode is [Manual Focus], you can adjust the focus while an image is magnified. If [AF in Focus Mag.] is set to [Off], the [Focus Magnifier] function is canceled when the shutter button is pressed halfway down.
   - When the shutter button is pressed halfway down while an image is magnified during the auto-focusing, different functions are performed depending on the [AF in Focus Mag.] setting.
     - When [AF in Focus Mag.] is set to [On]: Auto-focusing is performed again.
     - When [AF in Focus Mag.] is set to [Off]: The [Focus Magnifier] function is canceled.
   - You can set how long the image is to be shown magnified by selecting MENU → AF/MF (Focus) → [Focus Assistant] → [Focus Magnif. Time].

4. **Press the shutter button fully down to shoot the image.**

To use the focus magnifier function by touch operation

You can magnify the image and adjust the focus by touching the monitor. Set [Touch Operation] to [On] beforehand. Then, select the appropriate settings under [Touch Panel/Pad]. When the focus mode is [Manual Focus], you can perform [Focus Magnifier] by double-tapping the area to focus on while shooting with the monitor.
While shooting with the viewfinder, a frame is displayed in the center of the monitor by double-tapping and you can move the frame by dragging it. The image is magnified by pressing the center of the multi-selector.

Hint

- While using the focus magnifier function, you can move the magnified area by dragging it on the touch panel.
- To exit the focus magnifier function, double-tap the monitor again. When [AF in Focus Mag.] is set to [Off], the focus magnifier function is ended by pressing the shutter button halfway down.

Related Topic

- Auto Magnifier in MF

- Focus Magnif. Time (still image/movie)
- Initial Focus Mag. (still image)
- Initial Focus Mag. (movie)
- AF in Focus Mag.
- Touch Operation

5-021-326-12(1) Copyright 2020 Sony Corporation

Interchangeable Lens Digital Camera
ILCE-7SM3 α7SIII

Focus Magnif. Time (still image/movie)

Set the duration for which an image is to be magnified using the [Auto Magnifier in MF] or [Focus Magnifier] function.

1. **MENU → AF/MF (Focus) → [Focus Assistant] → [Focus Magnif. Time] → desired setting.**

Menu item details

2 Sec:
Magnifies the images for 2 seconds.

5 Sec:
Magnifies the images for 5 seconds.

No Limit:
Magnifies the images until you press the shutter button.

Related Topic

- Auto Magnifier in MF
- Focus Magnifier

5-021-326-12(1) Copyright 2020 Sony Corporation

Interchangeable Lens Digital Camera
ILCE-7SM3 α7SIII

Initial Focus Mag. (still image)

Sets the initial magnification scale when using [Focus Magnifier]. Select a setting that will help you frame your shot.

1 **MENU → AF/MF (Focus) → [Focus Assistant] → [Initial Focus Mag.] → desired setting.**

Menu item details

Full-frame shooting

x1.0:
Displays the image with the same magnification as the shooting screen.
x2.1:
Displays a 2.1-times enlarged image.

APS-C/Super 35mm size shooting

x1.0:
Displays the image with the same magnification as the shooting screen.
x1.5:
Displays a 1.5-times enlarged image.

Related Topic

- Focus Magnifier

5-021-326-12(1) Copyright 2020 Sony Corporation

Interchangeable Lens Digital Camera
ILCE-7SM3 α7SIII

Initial Focus Mag. (movie)

Sets the initial magnification scale for [Focus Magnifier] in the movie shooting mode.

1. **MENU → AF/MF (Focus) → [Focus Assistant] →[Initial Focus Mag.] → desired setting.**

Menu item details

x1.0:
Displays the image with the same magnification as the shooting screen.

x4.0:
Displays a 4.0-times enlarged image.

Related Topic

- Focus Magnifier

5-021-326-12(1) Copyright 2020 Sony Corporation

Interchangeable Lens Digital Camera
ILCE-7SM3 α7SIII

Peaking Display

Sets the peaking function, which enhances the outline of in-focus areas during shooting with Manual Focus or Direct Manual Focus.

1 **MENU → AF/MF (Focus) → [Peaking Display] → Select a menu item and set the desired parameter.**

Menu item details

Peaking Display:
Sets whether to display peaking. ([On] / [Off])
Peaking Level:
Sets the level of enhancement of in-focus areas. ([High] / [Mid] / [Low])
Peaking Color:
Sets the color used to enhance in-focus areas. ([Red] / [Yellow] / [Blue] / [White])

Note

- Since the product recognizes sharp areas as in focus, the effect of peaking differs, depending on the subject and lens.
- The outline of in-focus ranges is not enhanced on devices connected via HDMI.

Related Topic

- Manual Focus
- Direct manual focus (DMF)

5-021-326-12(1) Copyright 2020 Sony Corporation

Interchangeable Lens Digital Camera
ILCE-7SM3 α7SIII

Exposure Comp. (still image/movie)

Normally, exposure is set automatically (auto exposure). Based on the exposure value set by auto exposure, you can make the entire image brighter or darker if you adjust [Exposure Comp.] to the plus side or minus side, respectively (exposure compensation).

1 Release the exposure compensation dial lock, and turn the exposure compensation dial.

+ (over) side:
Images become brighter.
- (under) side:
Images become darker.

- Pressing the lock button at the center switches the exposure compensation dial between the locked and unlocked status. The dial is unlocked when the lock button is popped up and the white line is visible.
- You can adjust the exposure compensation value within the range of -3.0 EV to +3.0 EV.
- You can confirm the exposure compensation value that you set on the shooting screen.
  Monitor

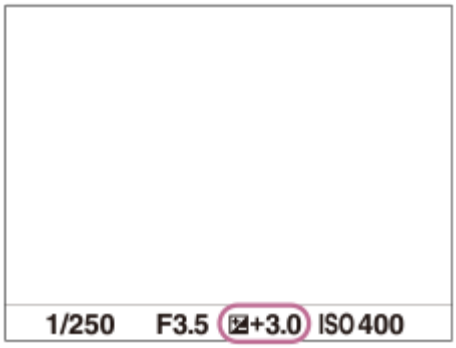

Viewfinder

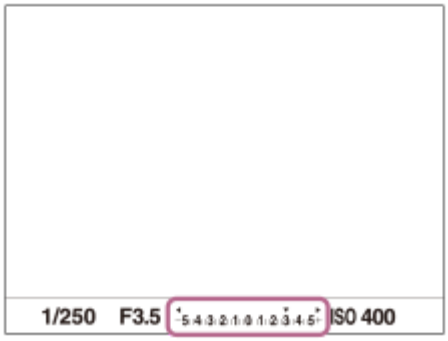

To set the exposure compensation value using the MENU

You can adjust the exposure compensation value within a range of -5.0 EV to +5.0 EV when the exposure compensation dial is set to “0.”
MENU → (Exposure/Color) → [Exposure Comp.] → [Exposure Comp.] → desired setting.

Hint

- You can operate the exposure compensation dial any time you want while the exposure compensation dial lock is released. The exposure compensation dial lock prevents unintentional changes to exposure compensation values.
- The settings of the exposure compensation dial will be prioritized over [Exposure Comp.] or [Dial Ev Comp] in MENU.
- Only a value between -3.0 EV and +3.0 EV with the equivalent image brightness appears on the screen when shooting. If you set an exposure compensation value outside this range, the image brightness on the screen will not be affected, but the value will be reflected in the recorded image.
- You can adjust the exposure compensation value within the range of -2.0 EV to +2.0 EV for movies.

Note

- You cannot perform the exposure compensation in the following shooting modes:
  - [Intelligent Auto]
- When using [Manual Exposure], you can perform the exposure compensation only when [ISO] is set to [ISO AUTO].
- If you shoot a subject in extremely bright or dark conditions, or when you use the flash, you may not be able to get a satisfactory effect.
- When you set the exposure compensation dial to “0” from a setting other than “0,” the exposure value switches to “0” regardless of the [Exposure Comp.] setting.

Related Topic

- Exposure step (still image/movie)
- Dial Ev Comp
- Exp.comp.set
- Cont. Bracket
- Single Bracket
- Zebra Display

5-021-326-12(1) Copyright 2020 Sony Corporation

Interchangeable Lens Digital Camera
ILCE-7SM3 α7SIII

Histogram display

A histogram shows the luminance distribution, displaying how many pixels there are by luminance.
To display the histogram on the shooting screen or playback screen, press the DISP (Display Setting) button repeatedly.

How to read the histogram

The histogram indicates darker values toward the left and brighter values toward the right.
The histogram changes depending on the exposure compensation.
A peak at the right or left end of the histogram indicates that the image has an overexposed or underexposed area, respectively. You cannot correct such defects using a computer after shooting. Perform exposure compensation before shooting as necessary.

(A): Pixel count
(B): Brightness

Note

- The information in the histogram display does not indicate the final photograph. It is information about image displayed on the screen. The final result depends on the aperture value, etc.
- The histogram display is extremely different between shooting and playback in the following cases:
  - When the flash is used
  - When shooting a low luminance subject such as a night scene

Related Topic

- Using the DISP (Display Setting) button
- Exposure Comp. (still image/movie)

5-021-326-12(1) Copyright 2020 Sony Corporation

Interchangeable Lens Digital Camera
ILCE-7SM3 α7SIII

Reset EV Comp. (still image/movie)

Sets whether to maintain the exposure value set using [Exposure Comp.] when you turn off the power when the exposure compensation dial position is set to “0.”

1. **MENU → (Exposure/Color)→ [Exposure Comp.]→ [Reset EV Comp.] → desired setting.**

Menu item details

Maintain:
Maintains the settings.
Reset:
Resets the settings.

Related Topic

- Exposure Comp. (still image/movie)

5-021-326-12(1) Copyright 2020 Sony Corporation

Interchangeable Lens Digital Camera
ILCE-7SM3 α7SIII

Exposure step (still image/movie)

You can adjust the setting increment for the shutter speed, aperture, and exposure compensation values.

1. **MENU → (Exposure/Color) → [Exposure Comp.] → [Exposure step] → desired setting.**

Menu item details

0.5EV / 0.3EV

Note

- Even if you set [Exposure step] to [0.5EV], the exposure value adjusted using the exposure compensation dial changes in steps of 0.3EV.

Related Topic

- Exposure Comp. (still image/movie)

5-021-326-12(1) Copyright 2020 Sony Corporation

Interchangeable Lens Digital Camera
ILCE-7SM3 α7SIII

Exposure Std. Adjust (still image/movie)

Adjusts this camera's standard for the correct exposure value for each metering mode.

1. **MENU → (Exposure/Color) → [Exposure Comp.] → [Exposure Std. Adjust] → desired metering mode.**
2. **Select the desired value as the metering standard.**
   - You can set a value from -1 EV to +1 EV in 1/6 EV increments.

Metering Mode

The set standard value will be applied when you select the corresponding metering mode in MENU → (Exposure/Color) → [Metering] → [Metering Mode].
Multi/ Center/ Spot/ Entire Screen Average/ Highlight

Note

- The exposure compensation will not be affected when [Exposure Std. Adjust] is changed.
- The exposure value will be locked according to the value set for [Spot] during using spot AEL.
- The standard value for M.M (Metered Manual) will be changed according to the value set in [Exposure Std. Adjust].
- The value set in [Exposure Std. Adjust] is recorded in Exif data separately from the exposure compensation value. The amount of exposure standard value will not be added to the exposure compensation value.
- If you set [Exposure Std. Adjust] during bracketing shooting, the number of shots for the bracketing will be reset.

Related Topic

- Metering Mode (still image/movie)

5-021-326-12(1) Copyright 2020 Sony Corporation

Interchangeable Lens Digital Camera
ILCE-7SM3 α7SIII

Dial Ev Comp

You can adjust the exposure using the front dial or rear dial when the exposure compensation dial is set to “0.” You can adjust the exposure in a range of -5.0 EV to +5.0 EV.

1. **Set the exposure compensation dial to "0."**
2. **MENU → (Setup) → [Dial Customize] → [Dial Ev Comp] → desired setting.**

Menu item details

Off:
Does not enable exposure compensation with the front or rear dial.

Front dial / Rear dial:
Enables exposure compensation with the front or rear dial.

Note

- When the exposure compensation function is assigned to the front or rear dial, any function that had been assigned to that dial previously is re-assigned to another dial.
- The settings of the exposure compensation dial will be prioritized over [Exposure Comp.] in MENU or the exposure settings using the front or rear dial.

Related Topic

- Exposure Comp. (still image/movie)

5-021-326-12(1) Copyright 2020 Sony Corporation

D-Range Optimizer (still image/movie)

By dividing the image into small areas, the product analyzes the contrast of light and shadow between the subject and the background, and creates an image with the optimal brightness and gradation.

1. **MENU → (Exposure/Color) → [Color/Tone] → [D-Range Optimizer] → desired setting.**

Menu item details

Off:
Does not adjust brightness and gradation.

D-Range Optimizer:
If you select [D-Range Optimizer: Auto], the camera will automatically adjust the brightness and gradation. To optimize the gradation of a recorded image by individual areas, select an optimization level from [D-Range Optimizer: Lv1] (weak) to [D-Range Optimizer: Lv5] (strong).

Note

- In the following situations, [D-Range Optimizer] is fixed to [Off]:
  - When [Picture Profile] is set to other than [Off]
- When shooting with [D-Range Optimizer], the image may be noisy. Select the proper level by checking the recorded image, especially when you enhance the effect.

5-021-326-12(1) Copyright 2020 Sony Corporation

Metering Mode (still image/movie)

Selects the metering mode that sets which part of the screen to measure for determining the exposure.

1. **MENU → (Exposure/Color) → [Metering] → [Metering Mode] → desired setting.**

Menu item details

Multi:
Measures light on each area after dividing the total area into multiple areas and determines the proper exposure of the entire screen (Multi-pattern metering).

Center:
Measures the average brightness of the entire screen, while emphasizing the central area of the screen (Center-weighted metering).

Spot:
Measures only inside the metering circle. This mode is suitable for measuring light on a specified part of the entire screen. The size of the metering circle can be selected from [Spot: Standard] and [Spot: Large]. The position of the metering circle depends the setting for [Spot Metering Point].

Entire Screen Avg.:
Measures the average brightness of the entire screen. The exposure will be stable even if the composition or the position of the subject changes.

Highlight:
Measures the brightness while emphasizing the highlighted area on the screen. This mode is suitable for shooting the subject while avoiding overexposure.

Hint

- The spot metering point can be coordinated with the focus area by using [Focus Point Link].
- When [Multi] is selected and [Face Priority in Multi Metering] is set to [On], the camera measures brightness based on detected faces.
- When [Metering Mode] is set to [Highlight] and the [D-Range Optimizer] function is activated, the brightness and the contrast will be corrected automatically by dividing the image into small areas and analyzing the contrast of light and shadow. Make settings based on the shooting circumstances.

Note

- [Metering Mode] is locked to [Multi] in the following shooting situations:
  - [Intelligent Auto]
  - When using a zoom function other than the optical zoom
- In [Highlight] mode, the subject may be dark if a brighter part exists on the screen.

Related Topic

- AE lock
- Spot Metering Point (still image/movie)
- Face Priority in Multi Metering (still image/movie)

- D-Range Optimizer (still image/movie)

5-021-326-12(1) Copyright 2020 Sony Corporation

Interchangeable Lens Digital Camera
ILCE-7SM3 α7SIII

Face Priority in Multi Metering (still image/movie)

Sets whether the camera measures brightness based on detected faces when [Metering Mode] is set to [Multi].

1. **MENU → (Exposure/Color) → [Metering] → [Face Priority in Multi Metering] → desired setting.**

Menu item details

On:
The camera measures brightness based on detected faces.
Off:
The camera measures brightness using the [Multi] setting, without detecting faces.

Note

- When the shooting mode is set to [Intelligent Auto], [Face Priority in Multi Metering] is locked to [On].
- When [Face/Eye Prior. in AF] is set to [On] and [Face/Eye Subject] is set to [Animal] under [Face/Eye AF], [Face Priority in Multi Metering] does not work.

Related Topic

- Metering Mode (still image/movie)

5-021-326-12(1) Copyright 2020 Sony Corporation

Interchangeable Lens Digital Camera
ILCE-7SM3 α7SIII

Spot Metering Point (still image/movie)

Sets whether to coordinate the spot metering position with the focus area when [Focus Area] is set to the following parameters:

- [Spot: S]/[Spot: M]/[Spot: L]
- [Expand Spot]
- [Tracking: Spot S]/[Tracking: Spot M]/[Tracking: Spot L]
- [Tracking: Expand Spot]

1 **MENU → (Exposure/Color) → [Metering] → [Spot Metering Point] → desired setting.**

Menu item details

Center:
The spot metering position does not coordinate with the focus area, but always meters brightness at the center.

Focus Point Link:
The spot metering position coordinates with the focus area.

Note

- Even if the spot metering position is coordinated with the [Tracking] start position, it will not be coordinated with the tracking of the subject.
- When [Focus Area] is set to the following parameters, the spot metering position is locked to the center.
  - [Wide]
  - [Zone]
  - [Center Fix]
  - [Tracking: Wide]/[Tracking: Zone]/[Tracking: Center Fix]

Related Topic

- Selecting the focus area (Focus Area)
- Metering Mode (still image/movie)

5-021-326-12(1) Copyright 2020 Sony Corporation

AE lock

When the contrast between the subject and background is high, such as when shooting a backlit subject or a subject near a window, meter the light at a spot where the subject appears to have the appropriate brightness and lock the exposure before shooting. To reduce the brightness of the subject, meter the light at a spot brighter than the subject and lock the exposure of the entire screen. To make the subject brighter, meter the light at a spot darker than the subject and lock the exposure of the entire screen.

1. **Adjust the focus on the spot at which the exposure is adjusted.**

2. **Press the AEL button.**

   The exposure is locked, and ✱ (AE lock) is displayed.

3. **Keep pressing the AEL button and focus on the subject again, then shoot the picture.**

   - Keep holding the AEL button down while taking a shot if you want to continue shooting with the fixed exposure. Release the button to reset the exposure.

Hint

- If you assign the [AEL toggle] function to the AEL button using [Custom Key Setting] or [Custom Key Setting], you can lock the exposure without holding down the button.

Note

- [AEL hold] and [AEL toggle] are not available when using zoom functions other than optical zoom.

Related Topic

- Using the AEL button
- Assigning frequently used functions to buttons (Custom Key Setting)

5-021-326-12(1) Copyright 2020 Sony Corporation

Interchangeable Lens Digital Camera
ILCE-7SM3 α7SIII

AEL w/ Shutter

Sets whether to fix the exposure when you press the shutter button halfway down.
Select [Off] to adjust the focus and the exposure separately.

1. **MENU → (Exposure/Color) → [Metering] → [AEL w/ Shutter] → desired setting.**

Menu item details

Auto:
Fixes the exposure after adjusting the focus automatically when you press the shutter button halfway down when [Focus Mode] is set to [Single-shot AF]. When [Focus Mode] is set to [Automatic AF], and the product determines that the subject is moving, or you shoot burst images, the fixed exposure is cancelled.

On:
Fixes the exposure when you press the shutter button halfway down.

Off:
Does not fix the exposure when you press the shutter button halfway down. Use this mode when you want to adjust focus and exposure separately.
The product keeps adjusting the exposure while shooting in [Cont. Shooting] mode.

Note

- Operation using the AEL button is prioritized over the [AEL w/ Shutter] settings.

5-021-326-12(1) Copyright 2020 Sony Corporation

Interchangeable Lens Digital Camera
ILCE-7SM3 α7SIII

Zebra Display

Sets a zebra pattern, which appears over part of an image if the brightness level of that part meets the IRE level that you have set. Use this zebra pattern as a guide to adjust the brightness.

1. **MENU → (Exposure/Color) → [Zebra Display] → Select a menu item and set the desired parameter.**

Menu item details

Zebra Display:
Sets whether to display the zebra pattern. ([Off] / [On])
Zebra Level:
Adjusts the brightness level of the zebra pattern. ([70] / [75] / [80] / [85] / [90]/ [95] / [100] / [100+])

Hint

- You can register values to check the correct exposure or overexposure as well as the brightness level for [Zebra Level]. The settings for correct exposure confirmation and overexposure confirmation are registered to [Custom 1] and [Custom 2] respectively in the default settings.
- To check the correct exposure, set a standard value and the range for the brightness level. The zebra pattern will appear on areas that fall within the range you set.
- To check the overexposure, set a minimum value for the brightness level. The zebra pattern will appear over areas with a brightness level equal to or higher than the value you set.

Note

- The zebra pattern is not displayed on devices connected via HDMI.

5-021-326-12(1) Copyright 2020 Sony Corporation

Interchangeable Lens Digital Camera
ILCE-7SM3 α7SIII

ISO (still image/movie)

Sensitivity to light is expressed by the ISO number (recommended exposure index). The larger the number, the higher the sensitivity.

1. **ISO on the control wheel → select desired setting.**
   - You can also select MENU → (Exposure/Color) → [Exposure] → [ISO].
   - You can change the value by 1/3 EV steps by turning the front dial as well as by turning the control wheel. You can change the value by 1 EV steps by turning the rear dial.

Menu item details

ISO AUTO:
Sets the ISO sensitivity automatically.
ISO 40 – ISO 409600:
Sets the ISO sensitivity manually. Selecting a larger number increases the ISO sensitivity.

Hint

- You can change the range of ISO sensitivity that is set automatically in [ISO AUTO] mode. Select [ISO AUTO] and press the right side of the control wheel, and set the desired values for [ISO AUTO Maximum] and [ISO AUTO Minimum].
- The higher the ISO value, the more noise will appear on the images.
- The available ISO settings will differ depending on whether you are shooting still images, shooting movies, or shooting slow-motion/quick-motion movies.
- When shooting movies, ISO values between 80 and 409600 are available. If the ISO value is set to a value smaller than 80, the setting is automatically switched to 80. When you finish recording the movie, the ISO value returns to the original setting.
- The available range for ISO sensitivity varies depending on the setting for [Gamma] under [Picture Profile].
- The available ISO sensitivity range changes when outputting RAW movies to another device connected via HDMI.

Note

- [ISO] is set to [ISO AUTO] in the following shooting modes:
  — [Intelligent Auto]
- When the ISO sensitivity is set to a value lower than ISO 80, the range for recordable subject brightness (dynamic range) may decrease.
- When you select [ISO AUTO] with the shooting mode set to [P], [A], [S] or [M], the ISO sensitivity will be automatically adjusted within the set range.
- If you point the camera at an extremely strong light source while shooting images with a low ISO sensitivity, highlighted areas in the images may be recorded as black areas.

5-021-326-12(1) Copyright 2020 Sony Corporation

Interchangeable Lens Digital Camera
ILCE-7SM3 α7SIII

ISO Range Limit (still image/movie)

You can limit the range of ISO sensitivity when the ISO sensitivity is set manually.

1. **MENU → (Exposure/Color) → [Exposure] → [ISO Range Limit] → [Minimum] or [Maximum], and select the desired values.**

To set the range for [ISO AUTO]

If you want to adjust the range of ISO sensitivity that is automatically set in the [ISO AUTO] mode, select MENU → (Exposure/Color) → [Exposure] → [ISO] → [ISO AUTO], and then press the right side of the control wheel to select [ISO AUTO Maximum]/[ISO AUTO Minimum].

Note

- ISO sensitivity values beyond the specified range become unavailable. To select ISO sensitivity values beyond the specified range, reset [ISO Range Limit].
- The available range for ISO sensitivity varies depending on the setting for [Gamma] under [Picture Profile].

Related Topic

- ISO (still image/movie)

5-021-326-12(1) Copyright 2020 Sony Corporation

ISO AUTO Min. SS

If you select [ISO AUTO] when the shooting mode is P (Program Auto) or A (Aperture Priority), you can set the shutter speed at which the ISO sensitivity starts changing.
This function is effective for shooting moving subjects. You can minimize subject blurring while also preventing camera shake.

1. **MENU → (Exposure/Color) → [Exposure] → [ISO AUTO Min. SS] → desired setting.**

Menu item details

SLOWER (Slower)/SLOW (Slow):
The ISO sensitivity will start to change at shutter speeds slower than [Standard], so you can shoot images with less noise.

STD (Standard):
The camera automatically sets the shutter speed based on the focal length of the lens.

FAST (Fast)/FASTER (Faster):
The ISO sensitivity will start to change at shutter speeds faster than [Standard], so you can prevent camera shake and subject blurring.

1/8000 — 30":
The ISO sensitivity starts to change at the shutter speed you have set.

Hint

- The difference in shutter speed at which ISO sensitivity starts to change between [Slower], [Slow], [Standard], [Fast], and [Faster] is 1 EV.

Note

- If the exposure is insufficient even when the ISO sensitivity is set to [ISO AUTO Maximum] in [ISO AUTO], in order to shoot with an appropriate exposure, the shutter speed will be slower than the speed set in [ISO AUTO Min. SS].
- In the following situations, the shutter speed may not function as set:
  - When using the flash to shoot bright scenes. (The maximum shutter speed is limited to the flash-syncing speed of 1/250 second.)
  - When using the flash to shoot dark scenes with the [Flash Mode] set to [Fill-flash]. (The minimum shutter speed is limited to the speed automatically determined by the camera.)

Related Topic

- Program Auto
- Aperture Priority
- ISO (still image/movie)

5-021-326-12(1) Copyright 2020 Sony Corporation

Interchangeable Lens Digital Camera
ILCE-7SM3 α7SIII

White Balance (still image/movie)

Corrects the tone effect of the ambient light condition to record a neutral white subject in white. Use this function when the color tones of the image did not come out as you expected, or when you want to change the color tones on purpose for photographic expression.

1 **MENU → (Exposure/Color) → [White Balance] → [White Balance] → desired setting.**

Menu item details

AWB Auto / Auto: Ambience / Auto: White / Daylight / Shade / Cloudy / Incandescent / −1 Fluor.: Warm White / 0 Fluor.: Cool White / +1 Fluor.: Day White / +2 Fluor.: Daylight / Flash / Underwater Auto :
When you select a light source that illuminates the subject, the product adjusts the color tones to suit to the selected light source (preset white balance). When you select [Auto], the product automatically detects the light source and adjusts the color tones.

C.Temp./Filter:
Adjusts the color tones depending on the light source. Achieves the effect of CC (Color Compensation) filters for photography.

Custom 1/Custom 2/Custom 3:
Memorizes the basic white color under the light conditions for the shooting environment.

Hint

- You can display the fine adjustment screen and perform fine adjustments of the color tones as required by pressing the right side of the control wheel. When [C.Temp./Filter] is selected, you can change the color temperature by turning the rear dial instead of pressing the right side of the control wheel.
- If the color tones do not come out as you expected in the selected settings, perform [WB bracket] shooting.
- (Auto: Ambience), (Auto: White) is displayed only when [Priority Set in AWB] is set to [Ambience] or [White].
- If you want to moderate abrupt white balance switching, such as when the recording environment switches during movie recording, you can change the white balance switching speed with the [Shockless WB] function.

Note

- [White Balance] is fixed to [Auto] in the following shooting modes:
  - [Intelligent Auto]
- If you use a mercury lamp or a sodium lamp as a light source, the accurate white balance will not be obtained because of the characteristics of the light. It is recommended to shoot images using a flash or select [Custom 1] to [Custom 3].
- Do not cover the visible light and IR sensor when [White Balance] is set to [Auto]. If you do so, the light source may be erroneously classified, and the white balance may be adjusted to an inappropriate color.

Related Topic

- Capturing a standard white color to set the white balance (custom white balance)
- Priority Set in AWB (still image/movie)
- WB bracket

- Shockless WB

5-021-326-12(1) Copyright 2020 Sony Corporation

Capturing a standard white color to set the white balance (custom white balance)

In a scene where the ambient light consists of multiple types of light sources, it is recommended to use the custom white balance in order to accurately reproduce the whiteness. You can register 3 settings.

1. **MENU → (Exposure/Color) → [White Balance] → [White Balance] → Select from among [Custom 1] to [Custom 3], and then press the right side of the control wheel.**

2. **Select SET (custom white balance set), and then press the center of the control wheel.**

3. **Hold the product so that the white area fully covers the white-balance capture frame, and then press the center of the control wheel.**

   After the shutter sound beeps, the calibrated values (Color Temperature and Color Filter) are displayed.

   - You can adjust the position of the white-balance capture frame by pressing the top/bottom/left/right side of the control wheel.
   - After capturing a standard white color, you can display the fine adjustment screen by pressing the right side of the control wheel. You can finely adjust the color tones as needed.
   - No shutter sound is produced in the following cases.
     - In the movie recording mode
     - When [Silent Mode] is set to [On]
     - When [Shutter Type] is set to [Electronic Shutter]

4. **Press the center of the control wheel.**

   The calibrated values will be registered. The monitor returns to the MENU display while retaining the memorized custom white balance setting.

   - The registered custom white balance setting will remain memorized until overwritten by the another setting.

Note

- The message [Capturing of the custom WB failed.] indicates that the value is in the unexpected range, for example when the subject is too vivid. You can register the setting at this point, but it is recommended that you set the white balance again. When an error value is set, the indicator (custom white balance) turns orange on the recording information display. The indicator will be displayed in white when the set value is in the expected range.
- If you use a flash when capturing a basic white color, the custom white balance will be registered with the lighting from the flash. Be sure to use a flash whenever you shoot with recalled settings that were registered with a flash.

5-021-326-12(1) Copyright 2020 Sony Corporation

Interchangeable Lens Digital Camera
ILCE-7SM3 α7SIII

Priority Set in AWB (still image/movie)

Selects which tone to prioritize when shooting under lighting conditions such as incandescent light when [White Balance] is set to [Auto].

1 **MENU → (Exposure/Color) → [White Balance] → [Priority Set in AWB] → desired setting.**

Menu item details

Standard:
Shoots with standard auto white balance. The camera automatically adjusts the color tones.

Ambience:
Prioritizes the color tone of the light source. This is suitable when you want to produce a warm atmosphere.

White:
Prioritizes a reproduction of white color when the color temperature of the light source is low.

Related Topic

- White Balance (still image/movie)

5-021-326-12(1) Copyright 2020 Sony Corporation

Shutter AWB Lock

You can set whether or not to lock the white balance while the shutter button is pressed when [White Balance] is set to [Auto] or [Underwater Auto].
This function prevents unintentional changes to the white balance during continuous shooting or when shooting with the shutter button pressed halfway down.

1. **MENU → (Exposure/Color) → [White Balance] → [Shutter AWB Lock] → desired setting.**

Menu item details

Shutter Half Press:
Locks the white balance while the shutter button is pressed halfway down, even in the auto white balance mode. The white balance is also locked during continuous shooting.

Cont. Shooting:
Locks the white balance to the setting in the first shot during continuous shooting, even in the auto white balance mode.

Off:
Operates with the normal auto white balance.

About [AWB Lock Hold] and [AWB Lock Toggle]

You can also lock the white balance in the auto white balance mode by assigning [AWB Lock Hold] or [AWB Lock Toggle] to the custom key. If you press the assigned key during shooting, the white balance will be locked.
The [AWB Lock Hold] function locks the white balance by stopping the automatic white balance adjustment while the button is pressed.
The [AWB Lock Toggle] function locks the white balance by stopping the automatic white balance adjustment after the button is pressed once. When you press the button again, the AWB lock is released.

- If you want to lock the white balance while recording a movie in the auto white-balance mode, also assign [AWB Lock Hold] or [AWB Lock Toggle] to the custom key.

Hint

- When you shoot with the flash while the automatic white balance is locked, the resulting color tones may be unnatural because the white balance was locked before the flash was emitted. In this case, set [Shutter AWB Lock] to [Off] or [Cont. Shooting], and do not use the [AWB Lock Hold] function or [AWB Lock Toggle] function when shooting. Alternatively, set [White Balance] to [Flash].

Related Topic

- White Balance (still image/movie)
- Assigning frequently used functions to buttons (Custom Key Setting)

5-021-326-12(1) Copyright 2020 Sony Corporation

Interchangeable Lens Digital Camera
ILCE-7SM3 α7SIII

Shockless WB

Sets the speed at which the white balance switches during movie recording, such as when the setting for [White Balance] or [Priority Set in AWB] is changed.

1 **MENU → (Exposure/Color) → [White Balance] → [Shockless WB] → desired setting.**

Menu item details

Off:
The white balance will switch immediately if you change the white balance setting during movie recording.

1 (Fast)/2/3 (Slow):
You can select the speed at which the white balance switches during movie shooting in order to make the white balance of the movie change more smoothly.
The speed settings in the order of fastest to slowest are [1 (Fast)], [2], and [3 (Slow)].

Note

- This function does not affect the speed at which the white balance changes when [White Balance] is set to [Auto].
- Even if a setting other than [Off] is selected, the following will be immediately applied to the movie regardless of the speed setting.
  - Fine adjustments to the color tones
  - Changes to the color temperature using [C.Temp./Filter]

Related Topic

- White Balance (still image/movie)

5-021-326-12(1) Copyright 2020 Sony Corporation

Interchangeable Lens Digital Camera
ILCE-7SM3 α7SIII

Creative Look (still image/movie)

“Looks” are presets for image creation preinstalled on the camera.
With this function, you can choose the finish of the image by selecting a “Look.” In addition, you can fine-tune the contrast, highlights, shadows, fade, saturation, sharpness, sharpness range, and clarity for each “Look.”

1. **MENU → (Exposure/Color) → [Color/Tone] → [Creative Look].**

2. **Select the desired “Look” or [Custom Look] using the top/bottom of the control wheel.**

3. **To adjust (Contrast), (Highlights), (Shadows), (Fade), (Saturation), (Sharpness), (Sharpness Range) and (Clarity), move to the right using the right side of the control wheel. Select the desired item using the right/left sides, and then select the value using the top/bottom sides.**

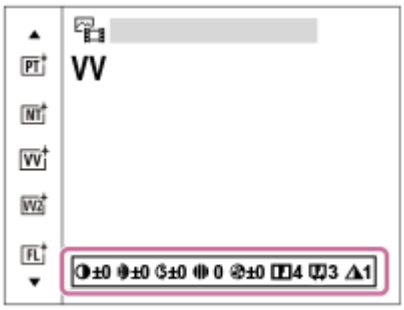

4. **When selecting [Custom Look], move to the right using the right side of the control wheel, and then select the desired “Look.”**

- Using [Custom Look], you can recall the same “Look” presets with slightly different settings.

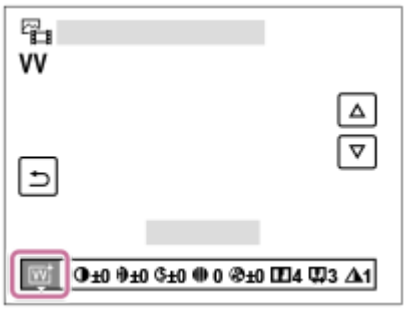

Menu item details

ST:
Standard finish for a wide range of subjects and scenes.

PT:
For capturing skin in a soft tone, ideally suited for shooting portraits.

NT:

The saturation and sharpness are lowered for shooting images in subdued tones. This is also suitable for capturing image material to be modified with a computer.

VV:

The saturation and contrast are heightened for shooting striking images of colorful scenes and subjects such as flowers, spring greenery, blue sky, or ocean views.

VV2:

Creates an image with bright and vivid colors with rich clarity.

FL:

Creates an image with moody finish by applying sharp contrast to the calm coloring as well as the impressive sky and colors of the greens.

IN:

Creates an image with matte textures by suppressing the contrast and saturation.

SH:

Creates an image with bright, transparent, soft, and vivid mood.

BW:

For shooting images in black and white monotone.

SE:

For shooting images in sepia monotone.

Registering preferred settings (Custom Look):

Select the six custom look (the boxes with numbers on the left side) to register preferred settings. Then select the desired settings using the right button.

You can recall the same “Look” presets with slightly different settings.

To adjust in greater detail

Based on each “Look,” items such as contrast can be adjusted to your liking. You can adjust not only the preset “Looks,” but also each [Custom Look], a function that allows you to register your favorite settings.
Select an item to be set by pressing the right/left sides of the control wheel, then set the value using the top/bottom sides of the control wheel.
When a setting value is changed from the default value, ✱ (asterisk) is added next to the “Look” icon displayed on the shooting screen.

Contrast:

The higher the value selected, the more the difference of light and shadow is accentuated, and the bigger the effect on the image. (-9 to +9)

Highlights:

Adjusts the brightness of the bright areas. When a higher value is selected, the image becomes brighter. (-9 to +9)

Shadows:

Adjusts the darkness of the dark areas. When a higher value is selected, the image becomes brighter. (-9 to +9)

Fade:

Adjusts the degree of fade. A larger value makes the effect greater. (0 to 9)

Saturation:

The higher the value selected, the more vivid the color. When a lower value is selected, the color of the image is restrained and subdued. (-9 to +9)

Sharpness:

Adjusts the sharpness. The higher the value selected, the more the contours are accentuated, and the lower the value selected, the more the contours are softened. (0 to 9)

Sharpness Range:

Adjust the range where the sharpness effect is applied. A larger value makes the sharpness effect apply to finer outlines. (1 to 5)

Clarity:

Adjusts the degree of clarity. A larger value makes the effect greater. (0 to 9)

To reset adjusted values for each “Look”

Adjusted values such as contrast that you have changed as desired can be collectively reset for each “Look.” Press the (delete) button on the adjustment screen for the “Look” that you want to reset. All adjusted values that have been

changed will return to their default values.

Hint

- For [Sharpness], [Sharpness Range], and [Clarity], take a test shot and either enlarge and play it on the camera monitor, or output it to a playback device to check the effect. Then, readjust the setting if needed.

Note

- [Creative Look] is fixed to [ST] in the following situations:
  - [Intelligent Auto]
  - [Picture Profile] is set to other than [Off].
- When this function is set to [BW] or [SE], [Saturation] cannot be adjusted.
- In the movie mode, [Sharpness Range] cannot be adjusted.

5-021-326-12(1) Copyright 2020 Sony Corporation

Interchangeable Lens Digital Camera
ILCE-7SM3 α7SIII

Picture Profile (still image/movie)

Allows you to change the settings for the color, gradation, etc. For details on “Picture Profile,” refer to https://helpguide.sony.net/di/pp/v1/en/index.html.
Although [Picture Profile] can be used for both still images and movies, the function is designed for movies.

Customizing the picture profile

You can customize the picture quality by adjusting picture profile items such as [Gamma] and [Detail]. When setting these parameters, connect the camera to a TV or monitor, and adjust them while observing the picture on the screen.

1. **MENU → (Exposure/Color) → [Color/Tone] → [Picture Profile] → the profile you want to change.**
2. **Move to the item index screen by pressing the right side of the control wheel.**
3. **Select the item to change using the top/bottom sides of the control wheel.**
4. **Select the desired value using the top/bottom sides of the control wheel and press in the center.**

Using the preset of the picture profile

The default settings [PP1] through [PP11] for movies have been set in advance in the camera based on various shooting conditions.
MENU → (Exposure/Color) → [Color/Tone] → [Picture Profile] → desired setting.

PP1:
Example setting using [Movie] gamma.
PP2:
Example setting using [Still] gamma.
PP3:
Example setting of natural color tone using the [ITU709] gamma.
PP4:
Example setting of a color tone faithful to the ITU709 standard.
PP5:
Example setting using [Cine1] gamma.
PP6:
Example setting using [Cine2] gamma.
PP7:
Example setting using [S-Log2] gamma.
PP8:
Example setting using the [S-Log3] gamma and the [S-Gamut3.Cine] under [Color Mode].
PP9:
Example setting using the [S-Log3] gamma and the [S-Gamut3] under [Color Mode].
PP10:
Example setting for recording HDR movies using [HLG2] gamma.
PP11:

Example setting using [S-Cinetone] gamma.

HDR movie recording

The camera can record HDR movies when a gamma from [HLG], [HLG1] to [HLG3] is selected in the picture profile. Picture profile preset [PP10] provides an example setting for HDR recording. Movies recorded using [PP10] can be viewed with a wider range of brightness than usual when played back on a TV supporting Hybrid Log-Gamma (HLG). This way, even scenes with a wide range of brightness can be recorded and displayed faithfully, without looking under or over-exposed. HLG is used in HDR TV program production, as defined in the international standard Recommendation ITU-R BT.2100.

Items of the picture profile

Black Level

Sets the black level. (–15 to +15)

Gamma

Selects a gamma curve.

Movie: Standard gamma curve for movies

Still: Standard gamma curve for still images

S-Cinetone: Gamma curve designed to achieve cinematic gradations and color expressions. This setting enables shooting with softer color reproduction ideal for portrait shooting.

Cine1: Softens the contrast in dark parts and emphasizes gradation in bright parts to produce a relaxed color movie. (equivalent to HG4609G33)

Cine2: Similar to [Cine1] but optimized for editing with up to 100% video signal. (equivalent to HG4600G30)

Cine3: Intensifies the contrast in light and shade more than [Cine1] and strengthens gradation in black.

Cine4: Strengthens the contrast in dark parts more than [Cine3].

ITU709: Gamma curve that corresponds to ITU709.

ITU709(800%): Gamma curve for confirming scenes on the assumption of shooting using [S-Log2] or [S-Log3].

S-Log2: Gamma curve for [S-Log2]. This setting is based on the assumption that the picture will be processed after shooting.

S-Log3: Gamma curve for [S-Log3] with more similar features to film. This setting is based on the assumption that the picture will be processed after shooting.

HLG: Gamma curve for HDR recording. Equivalent to the HDR standard Hybrid Log-Gamma, ITU-R BT.2100.

HLG1: Gamma curve for HDR recording. Emphasizes noise reduction. However, shooting is restricted to a narrower dynamic range than with [HLG2] or [HLG3].

HLG2: Gamma curve for HDR recording. Provides a balance of dynamic range and noise reduction.

HLG3: Gamma curve for HDR recording. Wider dynamic range than [HLG2]. However, noise may increase.

- [HLG1], [HLG2], and [HLG3] all apply a gamma curve with the same characteristics, but each offers a different balance between dynamic range and noise reduction. Each has a different maximum video output level, as follows: [HLG1]: approx. 87%, [HLG2]: approx. 95%, [HLG3]: approx. 100%.

Black Gamma

Corrects gamma in low intensity areas.

[Black Gamma] is fixed at “0” and cannot be adjusted when [Gamma] is set to [HLG], [HLG1], [HLG2], or [HLG3].

Range: Selects the correcting range. (Wide / Middle / Narrow)

Level: Sets the correcting level. (-7 (maximum black compression) to +7 (maximum black stretch))

Knee

Sets knee point and slope for video signal compression to prevent over-exposure by limiting signals in high intensity areas of the subject to the dynamic range of your camera.
[Knee] is disabled if [Mode] is set to [Auto] when [Gamma] is set to [Still], [Cine1], [Cine2], [Cine3], [Cine4], [ITU709(800%)], [S-Log2], [S-Log3], [HLG], [HLG1], [HLG2], or [HLG3]. To enable [Knee], set [Mode] to [Manual].

Mode: Selects auto/manual settings.

- Auto: The knee point and slope are set automatically.
- Manual: The knee point and slope are set manually.

Auto Set: Settings when [Auto] is selected for [Mode].

- Max Point: Sets the maximum point of the knee point. (90% to 100%)
- Sensitivity: Sets the sensitivity. (High / Mid / Low)

Manual Set: Settings when [Manual] is selected for [Mode].

- Point: Sets the knee point. (75% to 105%)
- Slope: Sets the knee slope. (-5 (gentle) to +5 (steep))

Color Mode

Sets type and level of colors.
In [Color Mode], only [BT.2020] and [709] are available when [Gamma] is set to [HLG], [HLG1], [HLG2], or [HLG3].

Movie: Suitable colors when [Gamma] is set to [Movie].

Still: Suitable colors when [Gamma] is set to [Still].

S-Cinetone: Suitable colors when [Gamma] is set to [S-Cinetone].

Cinema: Suitable colors when [Gamma] is set to [Cine1] or [Cine2].

Pro: Similar color tones to the standard image quality of Sony professional cameras (when combined with ITU709 gamma)

ITU709 Matrix: Colors corresponding to ITU709 standard (when combined with ITU709 gamma)

Black & White: Sets the saturation to zero for shooting in black and white.

S-Gamut: Setting based on the assumption that the pictures will be processed after shooting. Used when [Gamma] is set to [S-Log2].

S-Gamut3.Cine: Setting based on the assumption that the pictures will be processed after shooting. Used when [Gamma] is set to [S-Log3]. This setting allows you to shoot in a color space that can easily be converted for digital cinema.

S-Gamut3: Setting based on the assumption that the pictures will be processed after shooting. Used when [Gamma] is set to [S-Log3]. This setting allows you to shoot in a wide color space.

BT.2020: Standard color tone when [Gamma] is set to [HLG], [HLG1], [HLG2], or [HLG3].

709: Color tone when [Gamma] is set to [HLG], [HLG1], [HLG2], or [HLG3] and movies are recorded with HDTV color (BT.709).

Saturation

Sets the color saturation. (-32 to +32)

Color Phase

Sets the color phase. (-7 to +7)

Color Depth

Sets the color depth for each color phase. This function is more effective for chromatic colors and less effective for achromatic colors. The color looks deeper as you increase the setting value towards the positive side, and lighter as you decrease the value towards the negative side. This function is effective even if you set [Color Mode] to [Black & White].

[R] -7 (light red) to +7 (deep red)

[G] -7 (light green) to +7 (deep green)

[B] -7 (light blue) to +7 (deep blue)

[C] -7 (light cyan) to +7 (deep cyan)

[M] -7 (light magenta) to +7 (deep magenta)

[Y] -7 (light yellow) to +7 (deep yellow)

Detail

Sets items for [Detail].

Level: Sets the [Detail] level. (-7 to +7)

Adjust: The following parameters can be selected manually.

- Mode: Selects auto/manual setting. (Auto (automatic optimization) / Manual (The details are set manually.))
- V/H Balance: Sets the vertical (V) and horizontal (H) balance of DETAIL. (-2 (off to the vertical (V) side) to +2 (off to the horizontal (H) side))
- B/W Balance: Selects the balance of the lower DETAIL (B) and the upper DETAIL (W). (Type1 (off to the lower DETAIL (B) side) to Type5 (off to the upper DETAIL (W) side))
- Limit: Sets the limit level of [Detail]. (0 (Low limit level: likely to be limited) to 7 (High limit level: unlikely to be limited))
- Crispning: Sets the crispening level. (0 (shallow crispening level) to 7 (deep crispening level))
- Hi-Light Detail: Sets the [Detail] level in the high intensity areas. (0 to 4)

To copy the settings to another picture profile number

You can copy the settings of the picture profile to another picture profile number.

MENU → (Exposure/Color) → [Color/Tone] → [Picture Profile] → [Copy].

To reset the picture profile to the default setting

You can reset the picture profile to the default setting. You cannot reset all picture profile settings at once.

MENU → (Exposure/Color) → [Color/Tone] → [Picture Profile] → [Reset].

Note

- If you want to select different settings for movies and still images, add a check mark to [Picture Profile] under [Different Set for Still/Mv].
- If you develop RAW images with shooting settings, the following settings are not reflected:
  - Black Level
  - Black Gamma
  - Knee
  - Color Depth
- If you change [Gamma], the available ISO value range changes.
- There may be more noise in dark parts depending on the gamma settings. It may improve by setting the lens compensation to [Off].
- When using S-Log2 or S-Log3 gamma, the noise becomes more noticeable compared to when using other gammas. If the noise still is significant even after processing pictures, it may be improved by shooting with a brighter setting. However, the dynamic range becomes narrower accordingly when you shoot with a brighter setting. We recommend checking the picture in advance by test shooting when using S-Log2 or S-Log3.
- Setting [ITU709(800%)], [S-Log2] or [S-Log3] may cause an error in the white balance custom setup. In this case, perform custom setup with a gamma other than [ITU709(800%)], [S-Log2], or [S-Log3] first, and then reselect [ITU709(800%)], [S-Log2], or [S-Log3] gamma.
- If you set [Slope] to +5 in [Manual Set] under [Knee], [Knee] will be disabled.
- S-Gamut, S-Gamut3.Cine, and S-Gamut3 are color spaces exclusive to Sony. However, this camera's S-Gamut setting does not support the whole S-Gamut color space; it is a setting to achieve a color reproduction equivalent to S-Gamut.

Related Topic

- Gamma Display Assist
- Different Set for Still/Mv

5-021-326-12(1) Copyright 2020 Sony Corporation

Interchangeable Lens Digital Camera
ILCE-7SM3 α7SIII

Drive Mode

Select the appropriate mode for the subject, such as single shooting, continuous shooting or bracketing shooting.

1. **Select / (Drive Mode) on the control wheel → desired setting.**
   - You can also set the drive mode by selecting MENU → (Shooting) → [Drive Mode] → [Drive Mode].
2. **Select the desired mode using the right/left side of the control wheel.**

Menu item details

Single Shooting:
Normal shooting mode.

Cont. Shooting
Shoots images continuously while you press and hold down the shutter button.

Self-timer(Single):
Shoots an image using the self-timer after a designated number of seconds have elapsed since the shutter button was pressed.

Self-timer(Cont):
Shoots a designated number of images using the self-timer after a designated number of seconds have elapsed since the shutter button was pressed.

Cont. Bracket:
Shoots images while holding the shutter button down, each with different degrees of exposure.

Single Bracket:
Shoots a specified number of images, one by one, each with a different degrees of exposure.

WB bracket:
Shoots a total of three images, each with different color tones according to the selected settings for white balance, color temperature and color filter.

DRO Bracket:
Shoots a total of three images, each at a different degree of D-Range Optimizer.

Related Topic

- Cont. Shooting
- Self-timer(Single)
- Self-timer(Cont)
- Cont. Bracket
- Single Bracket
- WB bracket
- DRO Bracket

5-021-326-12(1) Copyright 2020 Sony Corporation

Interchangeable Lens Digital Camera
ILCE-7SM3 α7SIII

Cont. Shooting

Shoots images continuously while you press and hold down the shutter button.

1. **Select / (Drive Mode) of the control wheel → [Cont. Shooting].**
   - You can also set the continuous shooting by selecting MENU → (Shooting) → [Drive Mode] → [Drive Mode].
2. **Select the desired mode using the right/left side of the control wheel.**

Menu item details

Continuous Shooting: Hi+ :
Images are shot continuously at the maximum speed while you press and hold down the shutter button.
Continuous Shooting: Hi / Continuous Shooting: Mid/ Continuous Shooting: Lo:
Subjects are easier to track because the subject is displayed in real-time on the monitor or viewfinder during shooting.

Number of still images recordable with continuous shooting

The following table shows estimated numbers of recordable still images with [Drive Mode] set to [Continuous Shooting: Hi+]. The numbers may vary depending on the shooting conditions and the memory card.

Image Size: [L:12M]

File Format	Number of images when JPEG is selected	Number of images when HEIF is selected
JPEG/HEIF (Fine)	Approx. 1000 images or more	Approx. 1000 images or more
RAW (Compressed RAW)	Approx. 1000 images or more	Approx. 1000 images or more
RAW & JPEG/RAW & HEIF (Compressed RAW)*	Approx. 1000 images or more	Approx. 1000 images or more
RAW (Uncompressed RAW)	Approx. 1000 images or more	Approx. 1000 images or more
RAW & JPEG/RAW & HEIF (Uncompressed RAW)*	Approx. 1000 images or more	Approx. 1000 images or more

* When [JPEG Quality]/[HEIF Quality] is set to [Fine].

Hint

- To continuously adjust the focus and exposure during continuous shooting, set as follows:
  - [Focus Mode]: [Continuous AF]
  - [AEL w/ Shutter]: [Off] or [Auto]

Note

- When the F-value is greater than F11 in [Continuous Shooting: Hi+], [Continuous Shooting: Hi] or [Continuous Shooting: Mid] mode, the focus is locked to the setting in the first shot.
- The subject is not displayed in real-time on the monitor or viewfinder when shooting in [Continuous Shooting: Hi+] mode.
- The speed of continuous shooting decreases when you shoot with a flash.

Related Topic

- Remain Shoot Display (still image)
- Selecting the focus method (Focus Mode)
- AEL w/ Shutter

5-021-326-12(1) Copyright 2020 Sony Corporation

Self-timer(Single)

Shoots an image using the self-timer after a designated number of seconds have elapsed since the shutter button was pressed. Use the 5-second/10-second self-timer when you are going to be in the picture, and use the 2-second self-timer to reduce camera-shake caused by pressing the shutter button.

1. **Press / (Drive Mode) of the control wheel → [Self-timer(Single)].**
   - You can also set the drive mode by selecting MENU → (Shooting) → [Drive Mode] → [Drive Mode].
2. **Select the desired mode using the right/left side of the control wheel.**
3. **Adjust the focus and shoot the image.**

   The self-timer lamp flashes, a beep sounds, and a picture is taken after the designated number of seconds have elapsed.

Menu item details

The mode determines the number of seconds until a picture is taken after the shutter button is pressed.

10 Self-timer(Single): 10 sec
5 Self-timer(Single): 5 sec
2 Self-timer(Single): 2 sec

Hint

- Press the shutter button again or press / (Drive Mode) on the control wheel to stop the count of the self-timer.
- Press / (Drive Mode) on the control wheel and select (Single Shooting) to cancel the self-timer.
- Set [Audio signals] to [Off] to turn off the beeping sound during the self-timer countdown.
- To use the self-timer in bracket mode, select bracket mode under drive mode, then select MENU → (Shooting) → [Drive Mode] → [Bracket Settings] → [Selftimer during Bracket].

Related Topic

- Audio signals

5-021-326-12(1) Copyright 2020 Sony Corporation

Interchangeable Lens Digital Camera
ILCE-7SM3 α7SIII

Self-timer(Cont)

Shoots a designated number of images using the self-timer after a designated number of seconds have elapsed since the shutter button was pressed. You can choose the best from multiple shots.

1. **Press / (Drive Mode) of the control wheel → [Self-timer(Cont)].**
   - You can also set the drive mode by selecting MENU → (Shooting) → [Drive Mode] → [Drive Mode].
2. **Select the desired mode using the right/left side of the control wheel.**
3. **Adjust the focus and shoot the image.**

   The self-timer lamp flashes, a beep sounds, and pictures are taken after the designated number of seconds has elapsed. The designated number of pictures are taken continuously.

Menu item details

For example, three images are shot when 10 seconds have elapsed after the shutter button is pressed when [Self-timer(Cont.): 10 Sec. 3 Img.] is selected.

Self-timer(Cont.): 10 Sec. 3 Img.
Self-timer(Cont.): 10 Sec. 5 Img.
Self-timer(Cont.): 5 Sec. 3 Img.
Self-timer(Cont.): 5 Sec. 5 Img.
Self-timer(Cont.): 2 Sec. 3 Img.
Self-timer(Cont.): 2 Sec. 5 Img.

Hint

- Press the shutter button again or press / (Drive Mode) on the control wheel to stop the count of the self-timer.
- Press / (Drive Mode) on the control wheel and select (Single Shooting) to cancel the self-timer.

5-021-326-12(1) Copyright 2020 Sony Corporation

Cont. Bracket

Shoots multiple images while automatically shifting the exposure from base to darker and then to lighter. You can select an image that suits your purpose after recording.

1. **Press / (Drive Mode) of the control wheel → [Cont. Bracket].**
   - You can also set the drive mode by selecting MENU → (Shooting) → [Drive Mode] → [Drive Mode].
2. **Select the desired mode using the right/left side of the control wheel.**
3. **Adjust the focus and shoot the image.**
   - The base exposure is set at the first shot.
   - Keep pressing and holding the shutter button until bracket shooting is finished.

Menu item details

For example, the camera shoots a total of three images continuously with an exposure value shifted by plus or minus 0.3 EV when [Cont. Bracket: 0.3EV 3 Image] is selected.

Hint

- The last shot is shown on the auto review.

Note

- When [ISO AUTO] is selected in [Manual Exposure] mode, the exposure is changed by adjusting the ISO value. If a setting other than [ISO AUTO] is selected, the exposure is changed by adjusting the shutter speed.
- When the exposure is compensated, the exposure is shifted based on the compensated value.
- Bracket shooting is unavailable in the following shooting modes:
  - [Intelligent Auto]
- When the flash is used, the product performs flash bracket shooting, which shifts the amount of flash light even if [Cont. Bracket] is selected. Press the shutter button for each image.

Related Topic

- Bracket Settings
- Indicator during bracket shooting

5-021-326-12(1) Copyright 2020 Sony Corporation

Single Bracket

Shoots multiple images while automatically shifting the exposure from base to darker and then to lighter. You can select the image that suits your purpose after recording.
Since a single picture is taken each time you press the shutter button, you can adjust the focus or the composition for each shot.

1. **Select / (Drive Mode) of the control wheel → [Single Bracket].**
   - You can also set the drive mode by selecting MENU → (Shooting) → [Drive Mode] → [Drive Mode].
2. **Select the desired mode using the right/left side of the control wheel.**
3. **Adjust the focus and shoot the image.**
   - Press the shutter button for each image.

Menu item details

For example, when [Single Bracket: 0.3EV 3 Image] is selected, three images are shot one at a time with the exposure value shifted up and down in increments of 0.3 EV.

Note

- When [ISO AUTO] is selected in [Manual Exposure] mode, the exposure is changed by adjusting the ISO value. If a setting other than [ISO AUTO] is selected, the exposure is changed by adjusting the shutter speed.
- When the exposure is compensated, the exposure is shifted based on the compensated value.
- Bracket shooting is unavailable in the following shooting modes:
  - [Intelligent Auto]

Related Topic

- Bracket Settings
- Indicator during bracket shooting

5-021-326-12(1) Copyright 2020 Sony Corporation

Interchangeable Lens Digital Camera
ILCE-7SM3 α7SIII

Indicator during bracket shooting

Viewfinder

Ambient light* bracketing
3 images shifted by 0.3 EV steps
Exposure compensation ±0.0 EV

Monitor (Display All Info. or Histogram)

Ambient light* bracketing
3 images shifted by 0.3 EV steps
Exposure compensation ±0.0 EV

Flash bracketing
3 images shifted by 0.7 EV steps
Flash compensation -1.0 EV

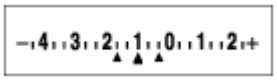

Monitor (For viewfinder)

Ambient light* bracketing (upper indicator)
3 images shifted by 0.3 EV steps
Exposure compensation ±0.0 EV

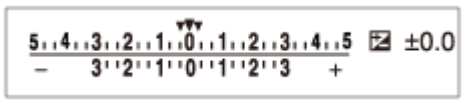

Flash bracketing (lower indicator)
3 images shifted by 0.7 EV steps
Flash compensation -1.0 EV

* Ambient light: A generic term for non-flash light including natural light, electric bulb and fluorescent lighting. Whereas the flash light blinks for a moment, ambient light is constant, so this kind of light is called "ambient light."

Hint

- During bracket shooting, guides equal to the number of images to be shot are displayed over/under the bracket indicator.
- When you start single bracket shooting, the guides will disappear one by one as the camera records images.

5-021-326-12(1) Copyright 2020 Sony Corporation

Interchangeable Lens Digital Camera
ILCE-7SM3 α7SIII

WB bracket

Shoots a total of three images, each with different color tones according to the selected settings for white balance, color temperature and color filter.

1. **Select / (Drive Mode) of the control wheel → [WB bracket].**
   - You can also set the drive mode by selecting MENU → (Shooting) → [Drive Mode] → [Drive Mode].
2. **Select the desired mode using the right/left side of the control wheel.**
3. **Adjust the focus and shoot the image.**

Menu item details

White Balance Bracket: Lo:
Records a series of three images with small changes in the white balance (within the range of 10MK^{-1}*).

White Balance Bracket: Hi:
Records a series of three images with large changes in the white balance (within the range of 20MK^{-1}*).

* MK^{-1} is the unit that indicates the capability of color temperature conversion filters and indicates the same value as "mired."

Hint

- The last shot is shown on the auto review.

Related Topic

- Bracket Settings

5-021-326-12(1) Copyright 2020 Sony Corporation

Interchangeable Lens Digital Camera
ILCE-7SM3 α7SIII

DRO Bracket

You can record a total of three images, each at a different degree of D-Range Optimizer value.

1. **Select / (Drive Mode) of the control wheel → [DRO Bracket].**
   - You can also set the drive mode by selecting MENU → (Shooting) → [Drive Mode] → [Drive Mode].
2. **Select the desired mode using the right/left side of the control wheel.**
3. **Adjust the focus and shoot the image.**

Menu item details

DRO Bracket: Lo:
Records a series of three images with small changes in the D-Range Optimizer value (Lv 1, Lv 2, and Lv 3).

DRO Bracket: Hi:
Records a series of three images with large changes in the D-Range Optimizer value (Lv 1, Lv 3, and Lv 5).

Hint

- The last shot is shown on the auto review.

Related Topic

- Bracket Settings

5-021-326-12(1) Copyright 2020 Sony Corporation

Interchangeable Lens Digital Camera
ILCE-7SM3 α7SIII

Bracket Settings

You can set the self-timer in bracket shooting mode, and the shooting order for exposure bracketing and white balance bracketing.

1 **MENU → (Shooting) → [Drive Mode] → [Bracket Settings] → desired setting.**

Menu item details

Selftimer during Bracket:
Sets whether to use the self-timer during bracket shooting. Also sets the number of seconds until the shutter is released if using the self-timer.
(Off/2 Sec/5 Sec/10 Sec)

Bracket order:
Sets the order of exposure bracketing and white balance bracketing.
(0→-→+/-→0→+)

Related Topic

- Cont. Bracket
- Single Bracket
- WB bracket
- DRO Bracket

5-021-326-12(1) Copyright 2020 Sony Corporation

Interchangeable Lens Digital Camera
ILCE-7SM3 α7SIII

Interval Shoot Func.

You can automatically shoot a series of still images with the shooting interval and number of shots that you set in advance (Interval shooting). On this camera, you cannot create a movie from still images produced by interval shooting.

1. **MENU → (Shooting) → [Drive Mode] → [Interval Shoot Func.] → [Interval Shooting] → [On].**
2. **MENU → (Shooting) → [Drive Mode] → [Interval Shoot Func.] → Select an item to set, and then select the desired setting.**
3. **Press the shutter button.**

   When the time set for [Shooting Start Time] has elapsed, shooting will start.

   - When the number of shots set for [Number of Shots] is completed, the camera will return to the standby screen for interval shooting.

Menu item details

Interval Shooting:
Sets whether to perform interval shooting. ([Off]/[On])

Shooting Start Time:
Sets the time from when you press the shutter button to when interval shooting starts. (1 second to 99 minutes 59 seconds)

Shooting Interval:
Sets the shooting interval (time from when one exposure starts to when the exposure for the next shot starts). (1 second to 60 seconds)

Number of Shots:
Sets the number of shots for interval shooting. (1 shot to 9999 shots)

AE Tracking Sensitivity:
Sets the tracking sensitivity of the auto exposure against the change in luminance during interval shooting. If you select [Low], exposure changes during interval shooting will be smoother. ([High]/[Mid]/[Low])

Shutter Type in Interval:
Sets the shutter type during interval shooting. ([Mechanical Shutter]/[Electronic Shutter])

Shoot Interval Priority:
Sets whether or not to prioritize the shooting interval when the exposure mode is [Program Auto] or [Aperture Priority] and the shutter speed becomes longer than the time set for [Shooting Interval]. ([Off]/[On])

Hint

- If you press the shutter button during interval shooting, interval shooting will end and the camera will return to the standby screen for interval shooting.
- To return to the normal shooting mode, set [Interval Shooting] to [Off].
- If you press a key to which one of the following functions has been assigned at the moment when shooting starts, the function will remain active during interval shooting even without you holding down the button.
  - [AEL hold]
  - [AEL hold]

- [AF/MF Selector Hold]
- [Regist. AF Area hold]
- [AWB Lock Hold]
- [My Dial 1 during Hold] to [My Dial 3 during Hold]

- If you set [Display as Group] to [On], still images shot with the interval shooting function will be displayed in groups.
- Still images shot with interval shooting can be played back continuously on the camera. If you intend to create a movie using the still images, you can preview the result.

Note

- You may not be able to record the set number of images depending on the remaining battery level and the amount of free space on the recording medium. Supply power via USB while shooting, and use a memory card with sufficient space.
- When the shooting interval is short, the camera may get hot easily. Depending on the ambient temperature, you may not be able to record the set number of images because the camera may stop recording to protect the equipment.
- During interval shooting (including the time between pressing the shutter button and the start of shooting), you cannot operate the dedicated shooting setting screen or MENU screen. However, you can adjust some settings such as the shutter speed with using the customized dial or control wheel.
- During interval shooting, auto review is not displayed.
- Interval shooting is unavailable in the following situations:
  - The shooting mode is set to [Intelligent Auto]

Related Topic

- Cont. Play for Interval
- Supplying power from a wall outlet (wall socket)

5-021-326-12(1) Copyright 2020 Sony Corporation

Interchangeable Lens Digital Camera
ILCE-7SM3 α7SIII

File Format (still image)

Sets the file format for still images.

1 **MENU → (Shooting) → [Image Quality] → [File Format] → desired setting.**

Menu item details

RAW:
Digital processing is not performed on this file format. Select this format to process images on a computer for professional purposes.

RAW & JPEG/RAW & HEIF:
A RAW image and a JPEG or HEIF image are created at the same time. This is suitable when you need two image files, a JPEG or HEIF for viewing, and a RAW for editing.

JPEG/HEIF:
The image is recorded in the JPEG or HEIF format.

About RAW images

- To open a RAW image file recorded with this camera, the software Imaging Edge Desktop is needed. With Imaging Edge Desktop, you can open a RAW image file, then convert it into a popular image format such as JPEG or TIFF, or readjust the white balance, saturation or contrast of the image.
- RAW images recorded with this camera have a resolution of 14 bits per pixel.
- You can set whether RAW images are compressed or uncompressed using [RAW File Type].

Note

- If you do not intend to edit the images on your computer, we recommend that you record in JPEG or HEIF format.
- An environment supporting the HEIF format is required to play back HEIF images.

Related Topic

- JPEG/HEIF Switch
- JPEG Quality/HEIF Quality
- JPEG Image Size/HEIF Image Size
- RAW File Type
- Introduction to computer software (Imaging Edge Desktop/Catalyst)

5-021-326-12(1) Copyright 2020 Sony Corporation

Interchangeable Lens Digital Camera
ILCE-7SM3 α7SIII

RAW File Type

Selects the file type for RAW images.

1. **MENU → (Shooting) → [Image Quality] → [RAW File Type] → desired setting.**

Menu item details

Compressed:
Records images in compressed RAW format. The file size of the image will be approximately half of that with [Uncompressed].

Uncompressed:
Records images in uncompressed RAW format. When [Uncompressed] is selected for [RAW File Type], the file size of the image will be larger than if it were recorded in compressed RAW format.

Note

- When [Uncompressed] is selected for [RAW File Type], the icon on the screen switches to RAW (RAW). RAW (RAW) is also displayed while an image shot in uncompressed RAW format is played back.

Related Topic

- File Format (still image)

5-021-326-12(1) Copyright 2020 Sony Corporation

JPEG/HEIF Switch

Switches the file format (JPEG / HEIF) of the still image to be recorded.
The JPEG format has general compatibility. You can view and edit JPEG files in various environments. The HEIF format has high compression efficiency. The camera can record with high image quality and small file sizes in the HEIF format. Depending on the computer or software, you may not be able to view or edit HEIF files. In addition, a HEIF-compatible environment is required to play back still images in the HEIF format. You can enjoy high-quality still images by connecting the camera and the TV via HDMI.

1 **MENU → (Shooting) → [Image Quality] → [JPEG/HEIF Switch] → desired setting.**

Menu item details

JPEG:
Performs digital processing on the RAW file and records it in the JPEG format. This setting gives priority to compatibility.

HEIF(4:2:0):
Performs digital processing on the RAW file and records it in the HEIF (4:2:0) format. This setting gives priority to image quality and compression efficiency.

HEIF(4:2:2):
Performs digital processing on the RAW file and records it in the HEIF (4:2:2) format. This setting gives priority to image quality.

Hint

- Depending on the setting for [JPEG/HEIF Switch], items related to the file format ([File Format], etc.) will switch to JPEG or HEIF.

Note

- HEIF image files recorded with this camera cannot be displayed on other cameras that do not support the HEIF file format. Be careful not to accidentally erase HEIF image files by formatting the memory card or deleting the files.
- When recording in the HEIF format with [HLG Still Image] set to [Off], the color space is recorded in sRGB. When [HLG Still Image] is set to [On], it is recorded in the BT.2100 color space (BT.2020 color gamut).

Related Topic

- File Format (still image)

5-021-326-12(1) Copyright 2020 Sony Corporation

Interchangeable Lens Digital Camera
ILCE-7SM3 α7SIII

JPEG Quality/HEIF Quality

Selects the image quality when recording JPEG or HEIF images.

1 **MENU → (Shooting) → [Image Quality] → [JPEG Quality]/[HEIF Quality] → desired setting.**

Menu item details

Extra fine/Fine/Standard:
Since the compression rate increases from [Extra fine] to [Fine] to [Standard], the file size decreases in the same order. This allows more files to be recorded on one memory card, but the image quality is lower.

Related Topic

- File Format (still image)

5-021-326-12(1) Copyright 2020 Sony Corporation

Interchangeable Lens Digital Camera
ILCE-7SM3 α7SIII

JPEG Image Size/HEIF Image Size

The larger the image size, the more detail will be reproduced when the image is printed on large-format paper. The smaller the image size, the more images can be recorded.

1 **MENU → (Shooting) → [Image Quality] → [JPEG Image Size]/[HEIF Image Size] → desired setting.**

Menu item details

When recording in the full frame size

When [Aspect Ratio] is set to 3:2

Setting values	Pixel number (horizontal×vertical)
L: 12M	4240×2832 pixels
M: 5.1M	2768×1848 pixels
S: 3.0M	2128×1416 pixels

When [Aspect Ratio] is set to 4:3

Setting values	Pixel number (horizontal×vertical)
L: 11M	3776×2832 pixels
M: 4.6M	2464×1848 pixels
S: 2.7M	1888×1416 pixels

When [Aspect Ratio] is set to 16:9

Setting values	Pixel number (horizontal×vertical)
L: 10M	4240×2384 pixels
M: 4.3M	2768×1560 pixels
S: 2.6M	2128×1200 pixels

When [Aspect Ratio] is set to 1:1

Setting values	Pixel number (horizontal×vertical)
L: 8.0M	2832×2832 pixels

Setting values	Pixel number (horizontal×vertical)
M: 3.4M	1840×1840 pixels
S: 2.0M	1408×1408 pixels

When recording in the APS-C-equivalent size

When [Aspect Ratio] is set to 3:2

Setting values	Pixel number (horizontal×vertical)
L: 5.1M	2768×1848 pixels
M: 3.0M	2128×1416 pixels
S: 1.3M	1376×920 pixels

When [Aspect Ratio] is set to 4:3

Setting values	Pixel number (horizontal×vertical)
L: 4.6M	2464×1848 pixels
M: 2.7M	1888×1416 pixels
S: 1.1M	1232×920 pixels

When [Aspect Ratio] is set to 16:9

Setting values	Pixel number (horizontal×vertical)
L: 4.3M	2768×1560 pixels
M: 2.6M	2128×1200 pixels
S: 1.1M	1376×776 pixels

When [Aspect Ratio] is set to 1:1

Setting values	Pixel number (horizontal×vertical)
L: 3.4M	1840×1840 pixels
M: 2.0M	1408×1408 pixels
S: 0.8M	912×912 pixels

Note

- The image size for RAW images corresponds to “L.”

Related Topic

- File Format (still image)
- Aspect Ratio

5-021-326-12(1) Copyright 2020 Sony Corporation

Interchangeable Lens Digital Camera
ILCE-7SM3 α7SIII

Aspect Ratio

1 **MENU → (Shooting) → [Image Quality] → [Aspect Ratio] → desired setting.**

Menu item details

3:2:
Same aspect ratio as 35 mm film

4:3:
The aspect ratio is 4:3.

16:9:
The aspect ratio is 16:9.

1:1:
The aspect ratio is 1:1.

5-021-326-12(1) Copyright 2020 Sony Corporation

HLG Still Image

By using gamma characteristics equivalent to HLG (Hybrid Log-Gamma: standard for HDR images), you can shoot still images with a wide dynamic range and a wide color gamut compatible with BT.2020.
[HLG Still Image] can only be set when shooting in the HEIF format. Set [JPEG/HEIF Switch] to [HEIF(4:2:0)] or [HEIF(4:2:2)], and [File Format] to [HEIF] beforehand.

1. **MENU → (Shooting) → [Image Quality] → [HLG Still Image] → desired setting.**

Menu item details

On:
Shoots HLG still images.
Off:
Shoots normal still images.

Hint

- You can reproduce a wider range of brightness by playing back HLG still images on an HLG-compatible TV or monitor.
- You can display HLG still images on the camera's monitor in almost the same quality as when they are displayed on an HLG-(BT.2020-) compatible monitor by setting as follows.
  - [Gamma Display Assist]: [On]
  - [Gamma Disp. Assist Typ.]: [Auto] or [HLG(BT.2020)]

Note

- In the following situations, [HLG Still Image] is fixed to [Off]:
  - [JPEG/HEIF Switch] is set to [JPEG]
  - [File Format] is set to [RAW] or [RAW & HEIF]
  - When a shooting mode other than P / A / S / M is set during still image shooting
  - When the ISO sensitivity is temporarily activated by the [Reg. Custom Shoot Set] function
  - When the [DRO Bracket] function under [Drive Mode] is temporarily activated by the [Reg. Custom Shoot Set] function
- When [HLG Still Image] is set to [On], the following functions are not available.
  - [D-Range Optimizer]
  - [Creative Look]
  - [DRO Bracket] under [Drive Mode]
  - [Picture Profile]
- When [HLG Still Image] is set to [On], the available ISO range changes.

Related Topic

- File Format (still image)
- JPEG/HEIF Switch
- Gamma Display Assist

5-021-326-12(1) Copyright 2020 Sony Corporation

Color Space

The way colors are represented using combinations of numbers or the range of color reproduction is called “color space.” You can change the color space depending on the purpose of the image.

1. **MENU → (Shooting) → [Image Quality] → [Color Space] → desired setting.**

Menu item details

sRGB:
This is the standard color space of the digital camera. Use [sRGB] in normal shooting, such as when you intend to print out the images without any modification.

AdobeRGB:
This color space has a wide range of color reproduction. When a large part of the subject is vivid green or red, Adobe RGB is effective. The file name of the recorded image starts with “_.”

Note

- The [Color Space] setting is invalid when shooting images in the HEIF format. If [HLG Still Image] is set to [Off], images will be recorded with the sRGB color space. When [HLG Still Image] is set to [On], it is recorded in the BT.2100 color space (BT.2020 color gamut).
- [AdobeRGB] is for applications or printers that support color management and DCF2.0 option color space. Images may not be printed or viewed in the correct colors if you use applications or printers that do not support Adobe RGB.
- When displaying images that were recorded with [AdobeRGB] on non-Adobe RGB-compliant devices, the images will be displayed with low saturation.

Related Topic

- JPEG/HEIF Switch
- HLG Still Image

5-021-326-12(1) Copyright 2020 Sony Corporation

Interchangeable Lens Digital Camera
ILCE-7SM3 α7SIII

File Format (movie)

Selects the movie file format.

1 **MENU → (Shooting) → [Image Quality] → [File Format] → desired setting.**

Menu item details

File Format	Characteristics
XAVC HS 4K	Records 4K movies in the XAVC HS format. The XAVC HS format uses the HEVC codec, which has high compression efficiency. The camera can record movies with higher image quality than XAVC S movies but the same data volume. Long GOP compression is used for movies.
XAVC S 4K	Records movies in 4K resolution (3840×2160). Long GOP compression is used for movies.
XAVC S HD	Records movies in HD resolution (1920×1080). Long GOP compression is used for movies.
XAVC S-I 4K	Records movies in the XAVC S-I format. The XAVC S-I format uses Intra compression for movies. This format is more suitable for editing than Long GOP compression.
XAVC S-I HD	Records movies in the XAVC S-I format. The XAVC S-I format uses Intra compression for movies. This format is more suitable for editing than Long GOP compression.

- Intra/Long GOP is a movie compression format. Intra compresses the movie by frame, and Long GOP compresses multiple frames. Intra compression has better response and flexibility when editing, but Long GOP compression has better compression efficiency.

Note

- To play back XAVC HS 4K movies on a smartphone or computer, you need a device or software with high processing capability that supports the HEVC codec.
- When recording 4K movies, [APS-C S35 Shooting] becomes disabled and locked to [Off].
- If an APS-C size dedicated lens is attached, the edges of the screen may appear dark. When recording 4K movies with this camera, we recommend using a lens compatible with the 35 mm full-frame format.

Related Topic

- Memory cards that can be used

5-021-326-12(1) Copyright 2020 Sony Corporation

Interchangeable Lens Digital Camera
ILCE-7SM3 α7SIII

Movie Settings (movie)

Sets the frame rate, bit rate, color information, etc.

1. **MENU → (Shooting) → [Image Quality] → [Movie Settings] → [Rec Frame Rate] → desired setting.**

2. **MENU → (Shooting) → [Image Quality] → [Movie Settings] → [Record Setting] → desired setting.**

Example of setting values

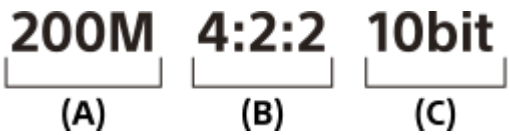

(A): Bit rate
(B): Color sampling
(C): Bit depth

- The higher the bit rate, the higher the image quality.
- Color sampling (4:2:2, 4:2:0) is the recording ratio of color information. The more uniform this ratio is, the better the color reproducibility, and it is possible to remove colors neatly even when compositing using a green screen.
- Bit depth represents the gradation of luminance information. When the bit depth is 8 bits, 256 levels of gradation can be obtained. When the bit depth is 10 bits, 1024 levels of gradation can be obtained. A larger value enables smoother expression from dark to bright areas.
- [4:2:2 10 bit] is a setting that assumes that the recorded movie will be edited on a computer. The playback environment for [4:2:2 10 bit] is limited.

Menu item details

When [File Format] is set to [XAVC HS 4K]

Rec Frame Rate	Record Setting	Size	Movie compression format
60p/50p	200M 4:2:2 10bit	3840×2160	Long GOP
60p/50p	150M 4:2:0 10bit	3840×2160	Long GOP
60p/50p	100M 4:2:2 10bit	3840×2160	Long GOP
60p/50p	75M 4:2:0 10bit	3840×2160	Long GOP
60p/50p	45M 4:2:0 10bit	3840×2160	Long GOP
24p*	100M 4:2:2 10bit	3840×2160	Long GOP
24p*	100M 4:2:0 10bit	3840×2160	Long GOP
24p*	50M 4:2:2 10bit	3840×2160	Long GOP
24p*	50M 4:2:0 10bit	3840×2160	Long GOP

Rec Frame Rate	Record Setting	Size	Movie compression format
24p*	30M 4:2:0 10bit	3840×2160	Long GOP
120p/100p	280M 4:2:2 10bit	3840×2160	Long GOP
120p/100p	200M 4:2:0 10bit	3840×2160	Long GOP

* Only when [NTSC/PAL Selector] is set to NTSC.

When [File Format] is set to [XAVC S 4K]

Rec Frame Rate	Record Setting	Size	Movie compression format
60p/50p	200M 4:2:2 10bit	3840×2160	Long GOP
60p/50p	150M 4:2:0 8bit	3840×2160	Long GOP
30p/25p	140M 4:2:2 10bit	3840×2160	Long GOP
30p/25p	100M 4:2:0 8bit	3840×2160	Long GOP
30p/25p	60M 4:2:0 8bit	3840×2160	Long GOP
24p*	100M 4:2:2 10bit	3840×2160	Long GOP
24p*	100M 4:2:0 8bit	3840×2160	Long GOP
24p*	60M 4:2:0 8bit	3840×2160	Long GOP
120p/100p	280M 4:2:2 10bit	3840×2160	Long GOP
120p/100p	200M 4:2:0 8bit	3840×2160	Long GOP

* Only when [NTSC/PAL Selector] is set to NTSC.

When [File Format] is set to [XAVC S HD]

Rec Frame Rate	Record Setting	Size	Movie compression format
60p/50p	50M 4:2:2 10bit	1920×1080	Long GOP
60p/50p	50M 4:2:0 8bit	1920×1080	Long GOP
60p/50p	25M 4:2:0 8bit	1920×1080	Long GOP
30p/25p	50M 4:2:2 10bit	1920×1080	Long GOP
30p/25p	50M 4:2:0 8bit	1920×1080	Long GOP
30p/25p	16M 4:2:0 8bit	1920×1080	Long GOP
24p*	50M 4:2:2 10bit	1920×1080	Long GOP
24p*	50M 4:2:0 8bit	1920×1080	Long GOP
120p/100p	100M 4:2:0 8bit	1920×1080	Long GOP
120p/100p	60M 4:2:0 8bit	1920×1080	Long GOP

* Only when [NTSC/PAL Selector] is set to NTSC.

When File Format is set to [XAVC S-I 4K]

Rec Frame Rate	Record Setting	Size	Movie compression format
60p/50p	600M 4:2:2 10bit/500M 4:2:2 10bit	3840×2160	Intra
30p/25p	300M 4:2:2 10bit/250M 4:2:2 10bit	3840×2160	Intra
24p*	240M 4:2:2 10bit	3840×2160	Intra

* Only when [NTSC/PAL Selector] is set to NTSC.

When File Format is set to [XAVC S-I HD]

Rec Frame Rate	Record Setting	Size	Movie compression format
60p/50p	222M 4:2:2 10bit/185M 4:2:2 10bit	1920×1080	Intra
30p/25p	111M 4:2:2 10bit/93M 4:2:2 10bit	1920×1080	Intra
24p*	89M 4:2:2 10bit	1920×1080	Intra

* Only when [NTSC/PAL Selector] is set to NTSC.

Related Topic

- File Format (movie)

5-021-326-12(1) Copyright 2020 Sony Corporation

S&Q Settings

You can record a moment that cannot be captured by the naked eye (slow-motion recording), or record a long-term phenomenon into a compressed movie (quick-motion recording). For example, you can record an intense sports scene, the moment when a bird starts to fly, a blooming flower, and a changing view of clouds or a starry sky. Sound will not be recorded.

1. **Set the mode dial to S&Q (S&Q Motion).**
2. **Select MENU → (Shooting) → [Shooting Mode] → [S&Q Exposure Mode] → and select the desired setting of slow-motion/quick-motion (Program Auto, Aperture Priority, Shutter Priority, or Manual Exposure).**
3. **Select MENU → (Shooting) → [Image Quality] → [S&Q S&Q Settings] → Select an item to set, and then select the desired setting.**
4. **Press the MOVIE (movie) button to start recording.**
   - Press the MOVIE button again to stop recording.

Menu item details

S&Q Rec Frame Rate:
Selects the frame rate of the movie.

S&Q Frame Rate:
Selects the shooting frame rate.

S&Q Record Setting:
Selects the bit rate, color sampling, and bit depth of the movie.

- The values that can be set for [S&Q Rec Frame Rate] and [S&Q Record Setting] are the same as the setting values for [Movie Settings].
- The format of the recorded movie will be the same as the [File Format] setting.

Playback speed

The playback speed will vary as below depending on the assigned [S&Q Rec Frame Rate] and [S&Q Frame Rate].

When [NTSC/PAL Selector] is set to NTSC

S&Q Frame Rate	S&Q Rec Frame Rate: 24p	S&Q Rec Frame Rate: 30p	S&Q Rec Frame Rate: 60p	S&Q Rec Frame Rate: 120p
240fps	10 times slower	8 times slower	4 times slower	2 times slower
120fps	5 times slower	4 times slower	2 times slower	Normal playback speed

S&Q Frame Rate	S&Q Rec Frame Rate: 24p	S&Q Rec Frame Rate: 30p	S&Q Rec Frame Rate: 60p	S&Q Rec Frame Rate: 120p
60fps	2.5 times slower	2 times slower	Normal playback speed	2 times quick
30fps	1.25 times slower	Normal playback speed	2 times quick	4 times quick
15fps	1.6 times quick	2 times quick	4 times quick	8 times quick
8fps	3 times quick	3.75 times quick	7.5 times quick	15 times quick
4fps	6 times quick	7.5 times quick	15 times quick	30 times quick
2fps	12 times quick	15 times quick	30 times quick	60 times quick
1fps	24 times quick	30 times quick	60 times quick	120 times quick

When [NTSC/PAL Selector] is set to PAL

S&Q Frame Rate	S&Q Rec Frame Rate: 25p	S&Q Rec Frame Rate: 50p	S&Q Rec Frame Rate: 100p
200fps	8 times slower	4 times slower	2 times slower
100fps	4 times slower	2 times slower	Normal playback speed
50fps	2 times slower	Normal playback speed	2 times quick
25fps	Normal playback speed	2 times quick	4 times quick
12fps	2.08 times quick	4.16 times quick	8.3 times quick
6fps	4.16 times quick	8.3 times quick	16.6 times quick
3fps	8.3 times quick	16.6 times quick	33.3 times quick
2fps	12.5 times quick	25 times quick	50 times quick
1fps	25 times quick	50 times quick	100 times quick

- [240fps]/[200fps] cannot be selected when [File Format] is set to following items:
  - XAVC HS 4K
  - XAVC S 4K
  - XAVC S-I 4K

Hint

- For an estimation of recordable time, refer to “Recordable movie times.”

Note

- In slow-motion/quick-motion recording, the actual shooting time differs from the time recorded in the movie. The recordable time displayed toward the top of the monitor shows the remaining recording time for the movie, not the remaining recording time on the memory card.
- In slow-motion recording, the shutter speed becomes faster and you may not be able to obtain the proper exposure. If this happens, decrease the aperture value or adjust the ISO sensitivity to a higher value.
- During slow-motion/quick-motion recording, the following functions are not available.
  - [Time Code Run]

– [Time Code Output]

Related Topic

- S&Q Motion: Exposure Mode
- Recordable movie times
- Memory cards that can be used

5-021-326-12(1) Copyright 2020 Sony Corporation

Interchangeable Lens Digital Camera
ILCE-7SM3 α7SIII

Proxy Settings

You can simultaneously record a low-bit-rate proxy movie when recording a movie or slow-motion recording/quick-motion recording.
Since proxy movies are small in file size, they are suitable for transferring to smartphones or uploading to websites.

1. **MENU → (Shooting) → [Image Quality] → [Proxy Settings] → Select an item to set, and then select the desired setting.**

Menu item details

Proxy Recording:
Selects whether to simultaneously record proxy movies. ([On] / [Off])

Proxy File Format:
Selects the recording format of the proxy movie. ([XAVC HS HD] / [XAVC S HD])

Proxy Rec. Settings:
Selects the bit rate, color sampling and bit depth of the proxy movie. ([16M 4:2:0 10bit] / [9M 4:2:0 10bit] / [6M 4:2:0 8bit])

Selectable proxy recording settings

Proxy File Format	Recording size	Recording frame rate	Proxy Rec. Settings	Compression codec
XAVC HS HD	1920×1080	Max. 60p/Max. 50p	16Mbps 4:2:0 10bit 9Mbps 4:2:0 10bit	MPEG-H HEVC/H.265
XAVC S HD	1280×720	Max. 60p/Max. 50p	6Mbps 4:2:0 8bit	MPEG-4 AVC/H.264

Hint

- Proxy movies are not displayed on the playback screen (single-image playback screen or image index screen). (proxy) is displayed over movies for which a proxy movie was simultaneously recorded.

Note

- Proxy movies cannot be played back on this camera.
- Proxy recording is not available in the following situations.
  Normal movie recording
  - [Rec Frame Rate] is set to [120p]/[100p] or higher

  Slow-motion recording/quick-motion recording
  - [S&Q Rec Frame Rate] is set to [120p]/[100p] or higher
  - [S&Q Frame Rate] is set to [120fps]/[100fps] or higher

- Deleting/protecting movies that have proxy movies removes/protects both the original and proxy movies. You cannot delete/protect only original movies or proxy movies.
- Movies cannot be edited on this camera.

Related Topic

- Sending Target (proxy movies)
- Memory cards that can be used

5-021-326-12(1) Copyright 2020 Sony Corporation

Interchangeable Lens Digital Camera
ILCE-7SM3 α7SIII

APS-C S35 (Super35mm) Shooting (still image/movie)

Sets whether to record in APS-C-equivalent size for still images and in Super 35mm-equivalent size for movies. If you select [On] or [Auto], you can use an APS-C size dedicated lens on this product.

1. **MENU → (Shooting) → [Image Quality] → [APS-C S35 Shooting] → desired setting.**

Menu item details

On:
Records in either APS-C-equivalent size or Super 35mm-equivalent size.
When [On] is selected, the angle of view becomes approximately 1.5 times the focal length indicated on the lens.

Auto:
Automatically sets the capture range according to the lens.

Off:
Always captures 35mm full-frame image sensor pictures.

Note

- When you attach an APS-C compatible lens and set [APS-C S35 Shooting] to [Off], you may not achieve the desired shooting results.
- When recording 4K movies, [APS-C S35 Shooting] becomes disabled and locked to [Off].

Related Topic

- Angle of view

5-021-326-12(1) Copyright 2020 Sony Corporation

Interchangeable Lens Digital Camera
ILCE-7SM3 α7SIII

Angle of view

The angle of view switches to the equivalent of full frame or APS-C/Super 35mm, depending on the setting for [APS-C S35 Shooting] and the attached lens. The angle of view is also different for still image shooting and movie shooting.

Angle of view equivalent to full frame

(A) When shooting still images
(B) When recording movies (Other than 4K 120p/ 100p)
(C) When recording movies (4K 120p/100p)

The camera shoots with an angle of view equivalent to full frame when [APS-C S35 Shooting] is set to [Off].

Angle of view equivalent to APS-C size/Super 35mm

(A) When shooting still images
(B) When recording movies (Full-HD)

The camera shoots with an angle of view equivalent to APS-C size or Super 35mm when [APS-C S35 Shooting] is set to [On]. The angle of view is approximately 1.5 times the focal length indicated on the lens for both still images and movies. However, 4K movies cannot be recorded when [APS-C S35 Shooting] is set to [On].

Related Topic

- File Format (movie)
- Movie Settings (movie)
- APS-C S35 (Super35mm) Shooting (still image/movie)

5-021-326-12(1) Copyright 2020 Sony Corporation

Interchangeable Lens Digital Camera
ILCE-7SM3 α7SIII

Touch Operation

Sets whether or not to activate touch operations on the monitor.

1 **MENU → (Setup) → [Touch Operation] → [Touch Operation] → desired setting.**

Menu item details

On:
Activates touch operations.

On: Playback Only:
Activates touch operations only during playback.

Off:
Deactivates touch operations.

Related Topic

- Touch Func. in Shooting: Touch Focus
- Touch Func. in Shooting:Touch Tracking
- Touch Panel/Pad
- Touch Sensitivity
- Touch operations on the monitor

5-021-326-12(1) Copyright 2020 Sony Corporation

Interchangeable Lens Digital Camera
ILCE-7SM3 α7SIII

Touch Sensitivity

Sets the touch operation sensitivity.

1. **MENU → (Setup) → [Touch Operation] → [Touch Sensitivity] → desired setting.**

Menu item details

Sensitive:
The touch responsivity is better than with [Standard].

Standard:
Sets the touch sensitivity to normal.

Hint

- If you want to deactivate touch operations on the monitor, set [Touch Operation] to [Off].

Note

- Even if the touch sensitivity is set to [Sensitive], the touch panel/pad may not react properly depending on the gloves used.

Related Topic

- Touch Operation

5-021-326-12(1) Copyright 2020 Sony Corporation

Interchangeable Lens Digital Camera
ILCE-7SM3 α7SIII

Touch Panel/Pad

Touch operations when shooting with the monitor are referred to as "touch panel operations," and touch operations when shooting with the viewfinder are referred to as "touch pad operations." You can select whether to activate touch panel operations or touch pad operations.

1 **MENU → (Setup) → [Touch Operation] → [Touch Panel/Pad] → desired setting.**

Menu item details

Both Valid:
Activates both the touch panel operations when shooting with the monitor and touch pad operations when shooting with the viewfinder.

Touch Panel Only:
Activates only the touch panel operations when shooting with the monitor.

Touch Pad Only:
Activates only the touch pad operations when shooting with the viewfinder.

Related Topic

- Touch Operation

5-021-326-12(1) Copyright 2020 Sony Corporation

Interchangeable Lens Digital Camera
ILCE-7SM3 α7SIII

Touch Pad Settings

You can adjust settings related to touch pad operations during viewfinder shooting.

1. **MENU → (Setup) → [Touch Operation] → [Touch Pad Settings] → desired setting.**

Menu item details

Operation in Vertical Orientation :
Sets whether to enable touch pad operations during vertically oriented viewfinder shooting. You can prevent erroneous operations during vertically oriented shooting caused by your nose, etc. touching the monitor.

Touch Position Mode:
Sets whether to move the focusing frame to the position touched on the screen ([Absolute Position]), or move the focusing frame to the desired position based on the direction of dragging and the amount of movement ([Relative Position]).

Operation Area:
Sets the area to be used for touch pad operations. Restricting the operational area can prevent erroneous operations caused by your nose, etc. touching the monitor.

About Touch Positioning Mode

Selecting [Absolute Position] lets you move the focusing frame to a distant position more quickly because you can directly specify the position of the focusing frame with touch operations.

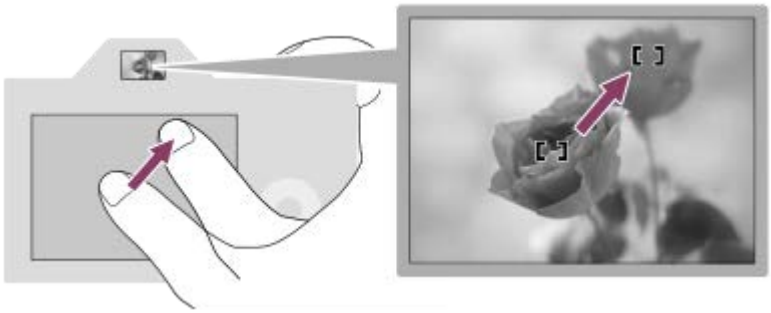

Selecting [Relative Position] lets you operate the touch pad from wherever is easiest, without having to move your finger over a wide area.

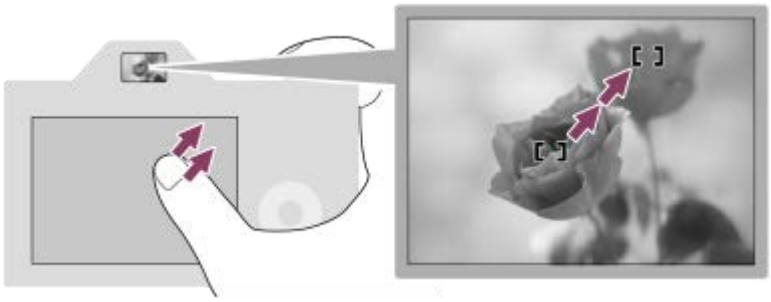

Hint

- In touch pad operations when [Touch Position Mode] is set to [Absolute Position], the area set in [Operation Area] is treated as the entire screen.

Related Topic

- Touch Panel/Pad

5-021-326-12(1) Copyright 2020 Sony Corporation

Interchangeable Lens Digital Camera
ILCE-7SM3 α7SIII

Touch Func. in Shooting: Touch Focus

[Touch Focus] allows you to specify a position where you want to focus using touch operations. Select MENU → (Setup) → [Touch Operation] → [Touch Operation] → [On] beforehand.
This function is available when [Focus Area] is set to one of following parameters:

- [Wide]
- [Zone]
- [Center Fix]
- [Tracking: Wide]
- [Tracking: Zone]
- [Tracking: Center Fix]

1 **MENU → (Setup) → [Touch Operation] → [Touch Func. in Shooting] → [Touch Focus].**

Specifying the position where you want to focus in the still image mode

When performing auto-focusing, you can specify the position where you want to focus using touch operations. After touching the monitor and specifying a position, press the shutter button halfway down to focus.

1. Touch the monitor.
   - When shooting with the monitor, touch the position where you want to focus.
   - When shooting with the viewfinder, you can move the position of the focus by touching and dragging on the monitor while looking through the viewfinder.

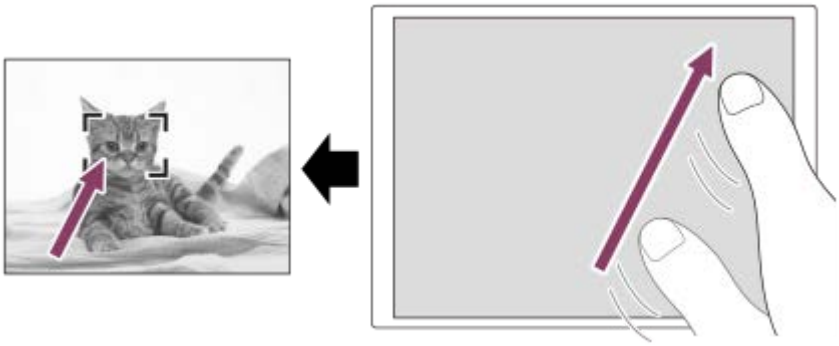

   - To cancel focusing with touch operations, touch (Touch focus release) icon or press the center of the control wheel if shooting with the monitor, and press the center of the control wheel if shooting with the viewfinder.

2. Press the shutter button halfway down to focus.
   - Press the shutter button all the way down to shoot images.

Specifying the position where you want to focus in the movie recording mode

The camera will focus on the touched subject.

1. Touch the subject on which you want to focus before or during recording.
   - When [Focus Mode] is set to [Continuous AF], the focus mode temporarily switches to manual focus, and the focus can be adjusted using the focus ring (spot focus). Spot focus is not available when shooting with the viewfinder.

- To cancel spot focus, touch (Touch focus release) icon or press the center of the control wheel.
- When [Focus Mode] is set to [Manual Focus], the focus mode temporarily switches to [Continuous AF]. When the touched area is in focus, the focus mode returns to manual focus.

Hint

- In addition to the touch focus function, touch operations such as the following are also available.
  - The focusing frame for [Spot] and [Expand Spot] can be moved by dragging.
  - When shooting still images in the manual focusing mode, the focus magnifier can be used by double-tapping the monitor.

Note

- The touch focus function is not available in the following situations:
  - When shooting still images in the manual focusing mode
  - When using the digital zoom
  - When using the LA-EA4 or LA-EA5

Related Topic

- Touch Operation
- Touch Panel/Pad
- Selecting the focus area (Focus Area)

5-021-326-12(1) Copyright 2020 Sony Corporation

Interchangeable Lens Digital Camera
ILCE-7SM3 α7SIII

Touch Func. in Shooting:Touch Tracking

You can use touch operations to select a subject you want to track in the still image shooting mode and movie recording mode.
Select MENU → (Setup) → [Touch Operation] → [Touch Operation] → [On] in advance.

1. **MENU → (Setup) → [Touch Operation] → [Touch Func. in Shooting] → [Touch Tracking].**

2. **Touch the subject that you want to track on the monitor.**

   Tracking will start.

   - When shooting with the viewfinder, you can use the touch pad to select a subject you want to track.

3. **Press the shutter button halfway down to focus.**

   - Press the shutter button all the way down to shoot images.

Hint

- To cancel tracking, touch (Tracking release) icon or press the center of the control wheel.

Note

- [Touch Tracking] is unavailable in the following situations:
  - When [Focus Mode] is set to [Manual Focus].
  - When using the Smart Zoom, Clear Image Zoom and Digital Zoom

Related Topic

- Touch Operation

5-021-326-12(1) Copyright 2020 Sony Corporation

Interchangeable Lens Digital Camera
ILCE-7SM3 α7SIII

Silent Mode Settings (still image/movie)

You can configure settings related to the silent mode, which allows you to shoot without shutter sounds or electronic sounds. You can also set whether or not to change the settings for other functions that emit sounds from the camera when the camera is set to the silent mode.

1. **MENU → (Shooting) → [Shutter/Silent] → [Silent Mode Settings] → desired setting.**

Menu item details

Silent Mode:
Sets whether or not to shoot without shutter sounds or electronic sounds. ([On]/[Off])
When set to [On], [Shutter Type] and [Shutter Type in Interval] become locked to [Electronic Shutter], and [Audio signals] becomes locked to [Off].

Target Function Settings:
Sets whether or not to simultaneously change the settings for other functions that emit sounds from the camera when the camera is set to the silent mode. ([Aperture Drive in AF]/[Auto Pixel Mapping])
If you select [Not Target], the setting values for each function will be retained even in the silent mode.

Note

- Use the [Silent Mode] function on your own responsibility, while taking sufficient consideration to the privacy and portrait rights of the subject.
- Even if [Silent Mode] is set to [On], it will not be completely silent.
- Even if [Silent Mode] is set to [On], the operating sound of the aperture and focus will sound.
- If [Auto Pixel Mapping] is set to [On], shutter sounds may occasionally be heard when the power is turned off. This is not a malfunction.
- Image distortion caused by the movement of the subject or the camera may occur.
- If you shoot images under instantaneous lightning or flickering lights, such as the flash light from other cameras or fluorescent lighting, a striping effect may occur on the image.
- Even if [Silent Mode] is set to [On], you may hear shutter sounds when you register a face using [Face Memory].
- When [Silent Mode] is set to [On], the following functions are not available:
  - Flash shooting
  - Long Exposure NR
  - e-Front Curtain Shut.
  - BULB shooting

Related Topic

- Shutter Type
- Interval Shoot Func.
- Aperture Drive in AF
- Auto Pixel Mapping

5-021-326-12(1) Copyright 2020 Sony Corporation

Interchangeable Lens Digital Camera
ILCE-7SM3 α7SIII

Shutter Type

You can set whether to shoot with a mechanical shutter or an electronic shutter.

1. **MENU → (Shooting) → [Shutter/Silent] → [Shutter Type] → desired setting.**

Menu item details

Mechanical Shutter:
Shoot with the mechanical shutter only.

Electronic Shutter:
Shoot with the electronic shutter only.

Hint

- In the following situations, set the [Shutter Type] to [Electronic Shutter].
  - When shooting with a high-speed shutter in a bright environment such as outside in bright sunlight, the beach, or snowy mountains.
  - When you want to increase the speed of continuous shooting.

Note

- In rare cases, the shutter sound may be produced when the power is turned off even if the [Shutter Type] is set to [Electronic Shutter]. However, this is not a malfunction.
- Even if [Shutter Type] is set to [Electronic Shutter], you may hear shutter sounds when you register a face using [Face Memory].
- [Shutter Type] cannot be selected when the shooting mode is a mode other than P/A/S/M.
- When [Shutter Type] is set to [Electronic Shutter], the following functions are not available:
  - Flash shooting
  - Long Exposure NR
  - e-Front Curtain Shut.
  - BULB shooting

5-021-326-12(1) Copyright 2020 Sony Corporation

Interchangeable Lens Digital Camera
ILCE-7SM3 α7SIII

e-Front Curtain Shut.

The electronic front curtain shutter function shortens the time lag between when the shutter button is pressed and the shutter is released.

1. **MENU → (Shooting) → [Shutter/Silent] → [e-Front Curtain Shut.] → desired setting.**

Menu item details

On:
Uses the electronic front curtain shutter function.

Off:
Does not use the electronic front curtain shutter function.

Note

- When you shoot at high shutter speeds with a large-aperture lens attached, out-of-focus circle produced by the bokeh effect may get cut off because of the shutter mechanism. If this happens, set [e-Front Curtain Shut.] to [Off].
- When a lens made by another manufacturer (including a Minolta/Konica-Minolta lens) is used, set this function to [Off]. If you set this function to [On], the correct exposure will not be set or the image brightness will be uneven.
- When you shoot at high shutter speeds, the image brightness may become uneven depending on the shooting environment. In such cases, set [e-Front Curtain Shut.] to [Off].

5-021-326-12(1) Copyright 2020 Sony Corporation

Interchangeable Lens Digital Camera
ILCE-7SM3 α7SIII

Release w/o Lens (still image/movie)

Sets whether or not the shutter can be released when no lens is attached.

1. **MENU → (Shooting) → [Shutter/Silent] → [Release w/o Lens] → desired setting.**

Menu item details

Enable:
Releases the shutter when no lens is attached. Select [Enable] when attaching the product to an astronomical telescope, etc.

Disable:
Does not release the shutter when a lens is not attached.

Note

- Correct metering cannot be achieved when you use lenses that do not provide a lens contact, such as the lens of an astronomical telescope. In such cases, adjust the exposure manually by checking it on the recorded image.

5-021-326-12(1) Copyright 2020 Sony Corporation

Release w/o Card

Sets whether the shutter can be released when no memory card has been inserted.

1. **MENU → (Shooting) → [Shutter/Silent] → [Release w/o Card] → desired setting.**

Menu item details

Enable:
Releases the shutter even if no memory card has been inserted.

Disable:
Does not release the shutter when no memory card has been inserted.

Note

- When no memory card has been inserted, the images shot will not be saved.
- The default setting is [Enable]. It is recommended that you select [Disable] prior to actual shooting.

5-021-326-12(1) Copyright 2020 Sony Corporation

Interchangeable Lens Digital Camera
ILCE-7SM3 α7SIII

Anti-flicker Shoot.

Detects flickering/blinking from artificial light sources such as fluorescent lighting and times the shooting of images to moments when flickering will have less of an impact.
This function reduces differences in the exposure and color tone caused by flickering between the upper area and the lower area of an image shot with fast shutter speed and during continuous shooting.

1. **MENU → (Shooting) → [Shutter/Silent] → [Anti-flicker Shoot.] → [On].**

2. **Press the shutter button halfway down, and then shoot the image.**
   - The product detects flickering when the shutter button is pressed halfway down.
   - Shoot the image after confirming that Flicker (flicker icon) is displayed.

Menu item details

Off:
Does not reduce influences caused by flickering.

On:
Reduces influences caused by flickering. When the camera detects flickering while the shutter button is pressed halfway down, Flicker (flicker icon) will be displayed.

Hint

- The color tone of the shot result may vary when you shoot the same scene using a different shutter speed. If that happens, we recommend that you shoot in [Shutter Priority] or [Manual Exposure] mode with a fixed shutter speed.
- You can perform anti-flicker shooting by pressing the AF-ON (AF On) button.
- You can perform anti-flicker shooting by pressing the shutter button halfway down or pressing the AF-ON (AF On) button, even when in the manual focus mode.
- When [Anti-flicker Shoot Sel.] is assigned to the desired key using [Custom Key Setting], you can switch the [Anti-flicker Shoot.] function on or off by pressing the key.

Note

- When you set [Anti-flicker Shoot.] to [On], the image quality of the live view is reduced.
- When you set [Anti-flicker Shoot.] to [On], the shutter release lag may increase slightly. In the continuous shooting mode, the shooting speed may slow down or the interval between shots may become irregular.
- The camera detects flickering when the frequency of the light source is 100 Hz or 120 Hz only.
- The camera cannot detect flickering depending on the light source and shooting conditions, such as a dark background.
- Even if the camera detects flickering, the influences caused by flickering may not be reduced enough depending on the light source or the shooting situation. We recommend that you take test shots beforehand.
- [Anti-flicker Shoot.] is not available when shooting in the following situations:
  - While bulb shooting
  - When [Silent Mode] is set to [On]
  - Movie shooting mode

- The color tone of the shot results may differ depending on the setting of [Anti-flicker Shoot.].

Related Topic

- Assigning frequently used functions to buttons (Custom Key Setting)

5-021-326-12(1) Copyright 2020 Sony Corporation

Interchangeable Lens Digital Camera
ILCE-7SM3 α7SIII

The zoom features available with this product

The zoom feature of the product provides a higher magnification zoom by combining various zoom features. The icon displayed on the screen changes, according to the selected zoom feature.

When a power zoom lens is mounted:

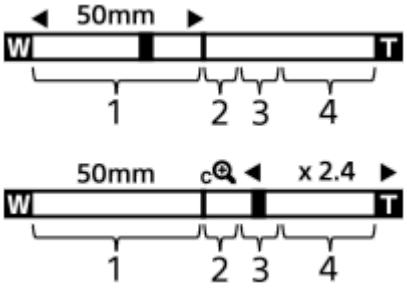

When a lens other than a power zoom lens is mounted:

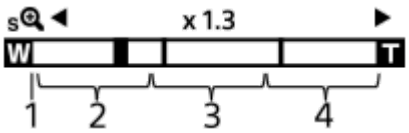

1. **Optical zoom range**
   Zoom images in the zoom range of a lens.
   When a power zoom lens is mounted, the zoom bar of the optical zoom range is displayed.
   When a lens other than a power zoom lens is mounted, the zoom slider becomes locked at the left end of the zoom bar while the zoom position is in the optical zoom range. The magnification is displayed as “×1.0.” If [Zoom Range] is set to [Optical zoom only], the zoom slider will not be displayed.

2. **Smart Zoom range** ( )
   Zoom images without causing the original quality to deteriorate by partially cropping an image (only when [JPEG Image Size]/[HEIF Image Size] is set to [M] or [S]).

3. **Clear Image Zoom range** ( )
   Zoom images using an image process with less deterioration.
   When you set [Zoom Range] to [Clear Image Zoom] or [Digital Zoom], you can use this zoom function.

4. **Digital Zoom range** ( )
   You can magnify images using an image process.
   When you set [Zoom Range] to [Digital Zoom], you can use this zoom function.

Hint

- The default setting for the [Zoom Range] is [Optical zoom only].
- The default setting for the [JPEG Image Size]/[HEIF Image Size] is [L]. To use the smart zoom, change [JPEG Image Size]/[HEIF Image Size] to [M] or [S].
- With a power zoom lens mounted, if you enlarge an image beyond the optical zoom range, the camera will automatically switch to Clear Image Zoom or digital zoom.

Note

- The Smart Zoom, Clear Image Zoom and Digital Zoom functions are not available when shooting in the following situations:

- [File Format] is set to [RAW] or [RAW & JPEG]/[RAW & HEIF].
- [Rec Frame Rate] is set to [120p]/[100p].
- During slow-motion/quick-motion shooting with the [S&Q Frame Rate] set to [240fps]/[200fps] or [120fps]/[100fps]

- You cannot use the Smart Zoom function with movies.
- When you use a zoom function other than the optical zoom, the [Focus Area] setting is disabled and the focusing frame is shown by the dotted line. The AF operates with priority on and around the center area.
- When you use the Smart Zoom, Clear Image Zoom or Digital Zoom function, [Metering Mode] is locked to [Multi].
- When using the Smart Zoom, Clear Image Zoom or Digital Zoom function, the following functions are not available:
  - Face/Eye Prior. in AF
  - Face Priority in Multi Metering
  - Tracking function
- To use another zoom function than the optical zoom for movies, assign [Zoom] to the desired key using [Custom Key Setting].

Related Topic

- Clear Image Zoom/Digital Zoom (Zoom)
- Zoom Range (still image/movie)
- About zoom scale

5-021-326-12(1) Copyright 2020 Sony Corporation

Clear Image Zoom/Digital Zoom (Zoom)

When you use a zoom function other than the optical zoom, you can exceed the zoom range of the optical zoom.

1. **MENU → (Shooting) → [Zoom] → [Zoom Range] → Select [Clear Image Zoom] or [Digital Zoom].**

2. **MENU → (Shooting) → [Zoom] → [Zoom] → desired value.**

   Press the center of the control wheel to exit.

   - You can also assign the [Zoom] function to the desired key by selecting MENU → (Setup) → [Operation Customize] → [Custom Key Setting] or [Custom Key Setting].
   - If you assign [Zoom Operation (T)] or [Zoom Operation (W)] to the desired key in advance by selecting MENU → (Setup) → [Operation Customize] → [Custom Key Setting] or [Custom Key Setting], you can zoom in and out simply by pressing that key.

Hint

- When a power zoom lens is attached, you can use the zoom lever or zoom ring to magnify the image. If you exceed the optical zoom magnification, you can switch to a zoom function other than the optical zoom with the same operation.
- Even when you select [Zoom] from MENU to zoom with the power zoom lens attached, the optical zoom is used up to the telephoto end of the lens.

Note

- When you select [Zoom] from MENU to zoom with a power zoom lens attached, step zoom operations cannot be performed.

Related Topic

- Zoom Range (still image/movie)
- The zoom features available with this product
- About zoom scale
- Assigning frequently used functions to buttons (Custom Key Setting)

5-021-326-12(1) Copyright 2020 Sony Corporation

Interchangeable Lens Digital Camera
ILCE-7SM3 α7SIII

Zoom Range (still image/movie)

You can select the zoom setting of the product.

1 **MENU → (Shooting) → [Zoom] → [Zoom Range] → desired setting.**

Menu item details

Optical zoom only:
Limits the zoom range to the optical zoom. You can use the Smart Zoom function if you set [JPEG Image Size]/[HEIF Image Size] to [M] or [S].

Clear Image Zoom :
Select this setting to use Clear Image Zoom. Even if the zoom range exceeds the optical zoom, the product magnifies images using an image process with less deterioration.

Digital Zoom :
When the zoom range of the Clear Image Zoom is exceeded, the product magnifies images to the largest scale. However, the image quality will deteriorate.

Note

- Set [Optical zoom only] if you want to magnify images within the range in which image quality does not deteriorate.

Related Topic

- The zoom features available with this product
- About zoom scale

5-021-326-12(1) Copyright 2020 Sony Corporation

Interchangeable Lens Digital Camera
ILCE-7SM3 α7SIII

Zoom Speed (still image/movie)

Sets the zoom speed when using the custom key to which [Zoom Operation (T)] / [Zoom Operation (W)] is assigned. This can be set separately for shooting standby and movie recording.

1. **MENU → (Shooting) → [Zoom] → [Zoom Speed] → desired setting item.**

Menu item details

Fixed Speed STBY :
Sets the zoom speed during shooting standby. (1 (Slow) to 8 (Fast))
Fixed Speed REC :
Sets the zoom speed during movie recording. (1 (Slow) to 8 (Fast))

Hint

- If a high speed is set for [Fixed Speed STBY] and a slow speed is set for [Fixed Speed REC], the angle of view can be changed quickly during shooting standby and slowly during movie recording.
- The [Zoom Speed] setting is also applied when performing zoom operations from MENU → (Shooting) → [Zoom] → [Zoom].

Note

- The zoom speed does not change when you operate the zoom ring of the lens or the zoom lever of the power zoom lens.
- If you increase the zoom speed, the sound of zoom operations may be recorded.

Related Topic

- Clear Image Zoom/Digital Zoom (Zoom)

5-021-326-12(1) Copyright 2020 Sony Corporation

Zoom Speed (Remote commander) (still image/movie)

Sets the zoom speed when performing zoom operations using the remote commander (sold separately) or [Ctrl w/ Smartphone]. This can be set separately for shooting standby and movie recording.

1. **MENU → (Shooting) → [Zoom] → [Zoom Speed] → desired setting item.**

Menu item details

Speed Type:
Sets whether or not to lock the zoom speed. ([Variable]/[Fix])

Fixed Speed STBY :
Sets the zoom speed during shooting standby when [Speed Type] is set to [Fix]. (1 (Slow) to 8 (Fast))

Fixed Speed REC :
Sets the zoom speed during movie recording when [Speed Type] is set to [Fix]. (1 (Slow) to 8 (Fast))

Hint

- When [Speed Type] is set to [Variable], pressing the zoom lever on the remote commander will increase the zoom speed (some remote commanders do not support variable zoom).
- If [Speed Type] is set to [Fix], a high speed is set for [Fixed Speed STBY], and a slow speed is set for [Fixed Speed REC], the angle of view can be changed quickly during shooting standby and slowly during movie recording.

Note

- If you increase the zoom speed, the sound of zoom operations may be recorded.

5-021-326-12(1) Copyright 2020 Sony Corporation

About zoom scale

The zoom scale that is used in combination with the zoom of the lens changes according to the selected image size.

When [Aspect Ratio] is [3:2]

Full size

JPEG Image Size/HEIF Image Size	Optical zoom only (smart zoom)	Clear Image Zoom	Digital Zoom
L: 12M	-	Approx. 2.0×	Approx. 4.0×
M: 5.1M	Approx. 1.5×	Approx. 3.1×	Approx. 6.1×
S: 3.0M	Approx. 2.0×	Approx. 4.0×	Approx. 8.0×

APS-C size

JPEG Image Size/HEIF Image Size	Optical zoom only (smart zoom)	Clear Image Zoom	Digital Zoom
L: 5.1M	-	Approx. 2.0×	Approx. 4.0×
M: 3.0M	Approx. 1.3×	Approx. 2.6×	Approx. 5.2×
S: 1.3M	Approx. 2.0×	Approx. 4.0×	Approx. 8.0×

Related Topic

- Clear Image Zoom/Digital Zoom (Zoom)
- The zoom features available with this product
- Zoom Range (still image/movie)
- JPEG Image Size/HEIF Image Size

5-021-326-12(1) Copyright 2020 Sony Corporation

Zoom Ring Rotate

Assigns zoom in (T) or zoom out (W) functions to the zoom ring rotation direction. Available only with power zoom lenses that support this function.

1. **MENU → (Setup) → [Operation Customize] → [Zoom Ring Rotate] → desired setting.**

Menu item details

Left(W)/Right(T):
Assigns zoom out (W) function to left-handed rotation and zoom-in (T) function to right-handed rotation.

Right(W)/Left(T):
Assigns zoom in (T) function to left-handed rotation and zoom-out (W) function to right-handed rotation.

5-021-326-12(1) Copyright 2020 Sony Corporation

Using flash (sold separately)

In dark environments, use the flash to light up the subject while shooting. Also use the flash to prevent camera-shake.

For details on the flash, refer to the instruction manual for the flash.

1 Attach the flash (sold separately) to the product.

2 Shoot after you have turned on the flash and it is fully charged.

(Charging flash icon) blinking: Charging is in progress
(Charging flash icon) lit up: Charging is finished

- The available flash modes depend on the shooting mode and function.

Note

- The light of the flash may be blocked if the lens hood is attached and the lower part of a recorded image may be shaded. Remove the lens hood.
- You cannot use the flash when recording movies. (You can use an LED light when using a flash (sold separately) with an LED light.)
- Before attaching/removing an accessory such as a flash to/from the Multi Interface Shoe, turn off the product first. When attaching an accessory, make sure that the accessory is fixed securely to the product.
- Do not use the Multi Interface Shoe with a commercially available flash that applies voltage of 250 V or more or has the reverse polarity of the camera. Doing so may cause a malfunction.
- When shooting with the flash and the zoom is set to W, the shadow of the lens may appear on the screen, depending on the shooting conditions. If this happens, shoot away from the subject or set the zoom to T and shoot with the flash again.
- The corners of a recorded image may be shaded, depending on the lens.
- When shooting with an external flash, light and dark stripes may appear on the image if the shutter speed is set to faster than 1/4000 seconds. If this occurs, Sony recommends shooting in the manual flash mode and setting the flash level to 1/2 or higher.
- For details on compatible accessories for the Multi Interface Shoe, visit the Sony website, or consult your Sony dealer or local authorized Sony service facility.

Related Topic

- Flash Mode
- Wireless Flash

5-021-326-12(1) Copyright 2020 Sony Corporation

Flash Mode

You can set the flash mode.

1. **MENU → (Exposure/Color) → [Flash] → [Flash Mode] → desired setting.**

Menu item details

Flash Off:
The flash does not operate.

Autoflash:
The flash works in dark environments or when shooting towards bright light.

Fill-flash:
The flash works every time you trigger the shutter.

Slow Sync.:
The flash works every time you trigger the shutter. Slow sync shooting allows you to shoot a clear image of both the subject and the background by slowing the shutter speed.

Rear Sync.:
The flash works right before the exposure is completed every time you trigger the shutter. Rear sync shooting allows you to shoot a natural image of the trail of a moving subject such as a moving car or a walking person.

Note

- The default setting depends on the shooting mode.
- Some [Flash Mode] settings are not available, depending on the shooting mode.

Related Topic

- Using flash (sold separately)

5-021-326-12(1) Copyright 2020 Sony Corporation

Flash Comp.

Adjusts the amount of flash light in a range of –3.0 EV to +3.0 EV. Flash compensation changes the amount of flash light only. Exposure compensation changes the amount of flash light along with the change of the shutter speed and aperture.

1. **MENU → (Exposure/Color) → [Flash] → [Flash Comp.] → desired setting.**
   - Selecting higher values (+ side) makes the flash level higher, and lower values (- side) makes the flash level lower.

Note

- [Flash Comp.] does not work when the shooting mode is set to the following modes:
  - [Intelligent Auto]
- The higher flash effect (+ side) may not be visible due to the limited amount of flash light available, if the subject is outside the maximum range of the flash. If the subject is very close, the lower flash effect (- side) may not be visible.
- If you attach an ND filter to the lens or attach a diffuser or a color filter to the flash, the appropriate exposure may not be achieved and images may turn out dark. In this case, adjust [Flash Comp.] to the desired value.

Related Topic

- Using flash (sold separately)

5-021-326-12(1) Copyright 2020 Sony Corporation

Interchangeable Lens Digital Camera
ILCE-7SM3 α7SIII

Exp.comp.set

Sets whether to apply the exposure compensation value to control both flash light and ambient light, or just ambient light.

1. **MENU → (Exposure/Color) → [Flash] → [Exp.comp.set] → desired setting.**

Menu item details

Ambient&flash:
Applies the exposure compensation value to control both flash light and ambient light.

Ambient only:
Applies the exposure compensation value to control ambient light only.

Related Topic

- Flash Comp.

5-021-326-12(1) Copyright 2020 Sony Corporation

Interchangeable Lens Digital Camera
ILCE-7SM3 α7SIII

Wireless Flash

There are two methods for wireless flash shooting: light-signal flash shooting that uses the light of the flash attached to the camera as a signal light, and radio-signal flash shooting that uses wireless communication. To perform radio-signal flash shooting, use a compatible flash or the Wireless Radio Commander (sold separately). For details on how to set each method, refer to the instruction manual of the flash or the Wireless Radio Commander.

1. **MENU → (Exposure/Color) → [Flash] → [Wireless Flash] → [On].**

2. **Remove the shoe cap from the camera, and then attach the flash or the Wireless Radio Commander.**
   - When performing light-signal wireless flash shooting, set the attached flash as the controller.
     When performing radio-signal wireless flash shooting with a flash attached to the camera, set the attached flash as the commander.

3. **Set up an off-camera flash that is set to wireless mode, or that is attached to the Wireless Radio Receiver (sold separately).**
   - You can perform a test flashing by assigning the [Wireless Test Flash] function to a custom key using [Custom Key Setting], and then pressing that key.

Menu item details

Off:
Does not use the wireless flash function.

On:
Uses the wireless flash function to make an external flash or flashes emit light at a distance from the camera.

Note

- The off-camera flash may emit light after receiving a light signal from a flash used as the controller of another camera. If this occurs, change the channel of your flash. For details on how to change the channel, refer to the instruction manual for the flash.
- For the flash that is compatible with wireless flash shooting, visit the Sony website, or consult your Sony dealer or local authorized Sony service facility.

Related Topic

- External Flash Set.

5-021-326-12(1) Copyright 2020 Sony Corporation

Red Eye Reduction

When using the flash, it is fired two or more times before shooting to reduce the red-eye phenomenon.

1. **MENU → (Exposure/Color) → [Flash] → [Red Eye Reduction] → desired setting.**

Menu item details

On:
The flash is always fired to reduce the red-eye phenomenon.

Off:
Does not use Red Eye Reduction.

Note

- Red Eye Reduction may not produce the desired effects. It depends on individual differences and conditions, such as distance to the subject, or whether the subject looks at the pre-strobe or not.

5-021-326-12(1) Copyright 2020 Sony Corporation

Interchangeable Lens Digital Camera
ILCE-7SM3 α7SIII

FEL lock

The flash level is automatically adjusted so that the subject gets the optimum exposure during normal flash shooting. You can also set the flash level in advance.
FEL: Flash Exposure Level

1. **MENU → (Setup) → [Operation Customize] → [Custom Key Setting]→ desired button, then assign the [FEL Lock toggle] function to the button.**

2. **Center the subject on which FEL is to be locked, and adjust the focus.**

3. **Press the button to which [FEL Lock toggle] is registered, and set the flash amount.**
   - A pre-flash flashes.
   - The (FEL lock) lights up.

4. **Adjust the composition and shoot the image.**

   - When you want to release the FEL lock, press the button to which the [FEL Lock toggle] is registered again.

Hint

- By setting [FEL Lock hold], you can hold the setting while the button is pressed down. Also, by setting [FEL Lock/AEL hold] and [FEL Lock/AEL tggle.], you can shoot images with the AE locked in the following situations.
  - When [Flash Mode] is set to [Flash Off] or [Autoflash].
  - When the flash cannot go off.
  - When using an external flash that is set to manual flash mode.

Note

- The FEL lock cannot be set when a flash is not attached.
- If a flash that does not support the FEL lock is attached, an error message is displayed.
- When both AE and FEL lock are fixed, (AE Lock/FEL Lock) icon lights up.

Related Topic

- Assigning frequently used functions to buttons (Custom Key Setting)

5-021-326-12(1) Copyright 2020 Sony Corporation

Interchangeable Lens Digital Camera
ILCE-7SM3 α7SIII

External Flash Set.

You can configure the settings of a flash (sold separately) attached to the camera using the monitor and control wheel of the camera.
Update the software of your flash to the latest version before using this function.
For details on flash functions, refer to the instruction manual for the flash.

1. **Attach the flash (sold separately) to the Multi Interface Shoe of the camera, and then turn on the camera and the flash.**
2. **MENU → (Exposure/Color) → [Flash] → [External Flash Set.] → desired setting item.**
3. **Configure the setting using the control wheel of the camera.**

Menu item details

Ext. Flash Firing Set.:
Allows you to configure settings related to the firing of the flash, such as the flash mode, flash level, etc.

Ext. Flash Cust. Set.:
Allows you to configure other flash settings, wireless settings, and flash unit settings.

Hint

- If you assign [Ext. Flash Firing Set.] to a desired key using [Custom Key Setting], you can open the [Ext. Flash Firing Set.] screen simply by pressing that key.
- You can adjust settings by operating the flash even while you are using [External Flash Set.].
- You can also configure the settings for a Wireless Radio Commander (sold separately) attached to the camera.

Note

- You can only use [External Flash Set.] to configure the settings of a flash (sold separately) or Wireless Radio Commander (sold separately) manufactured by Sony and attached to the Multi Interface Shoe of the camera.
- You can only use [External Flash Set.] when the flash is attached directly to the camera. You cannot use this function when shooting with an off-camera flash that is connected using a cable.
- Only some of the functions of the attached flash are configurable using [External Flash Set.]. You cannot perform pairing with other flashes, reset the flash, initialize the flash, etc. via [External Flash Set.].
- [External Flash Set.] is unavailable under the following conditions:
  - When the flash is not attached to the camera
  - When a flash that does not support [External Flash Set.] is attached
  - When the mode dial is set to (Movie) or S&Q (S&Q Motion), or during movie shooting

  Also, [External Flash Set.] may be unavailable depending on the state of the flash.
- For details on flashes and Wireless Radio Commanders that are compatible with this function, refer to the following support page.
  https://www.sony.net/dics/7sm3/

Related Topic

- Assigning frequently used functions to buttons (Custom Key Setting)

5-021-326-12(1) Copyright 2020 Sony Corporation

Interchangeable Lens Digital Camera
ILCE-7SM3 α7SIII

Video Light Mode

Sets the illumination setting for the HVL-LBPC LED light (sold separately).

1 **MENU →** **(Setup) → [Setup Option] → [Video Light Mode] → desired setting.**

Menu item details

Power Link:
The video light turns on/off in sync with the ON/OFF operation of this camera.

REC Link:
The video light turns on/off in sync with movie recording start/stop.

REC Link&STBY:
The video light turns on when movie recording starts and dims when not recording (STBY).

Auto:
The video light automatically turns on when it is dark.

5-021-326-12(1) Copyright 2020 Sony Corporation

SteadyShot (still image)

Sets whether or not to use the SteadyShot function.

1. **MENU → (Shooting) → [Image Stabilization] → [SteadyShot] → desired setting.**

Menu item details

On:
Uses [SteadyShot].

Off:
Does not use [SteadyShot].

Hint

- When using a tripod, etc., make sure to turn off the SteadyShot function because this can cause any malfunction when shooting.
- If you assign [SteadyShot Select] to a desired key using [Custom Key Setting], you can switch the [SteadyShot] function on or off by pressing the key.
- When shooting in a dark place, the (SteadyShot) icon may blink. We recommend that you set a faster shutter speed by decreasing the aperture value or adjusting the ISO sensitivity to a higher value.

Related Topic

- SteadyShot (movie)
- SteadyShot Adjust. (still image/movie)
- Assigning frequently used functions to buttons (Custom Key Setting)

5-021-326-12(1) Copyright 2020 Sony Corporation

SteadyShot (movie)

Sets [SteadyShot] effect when shooting movies.

1. **MENU → (Shooting) → [Image Stabilization] → [SteadyShot] → desired setting.**

Menu item details

Active:
Provides a more powerful SteadyShot effect.
Standard:
Reduces camera shake under stable movie shooting conditions.
Off:
Does not use [SteadyShot].

Note

- When using a tripod, etc., make sure to turn off the SteadyShot function because this can cause any malfunction when shooting.
- If you change the setting for [SteadyShot], the angle of view will change. When [SteadyShot] is set to [Active], the angle of view becomes narrower. When the focal length is 200 mm or more, we recommend setting [SteadyShot] to [Standard].
- In the following situations, [Active] cannot be selected:
  - Normal movie recording:
    [Rec Frame Rate] is set to [120p]/[100p] or higher
  - Slow-motion recording/quick-motion recording:
    [S&Q Frame Rate] is set to [120fps]/[100fps] or higher

Related Topic

- SteadyShot (still image)
- SteadyShot Adjust. (still image/movie)

5-021-326-12(1) Copyright 2020 Sony Corporation

Interchangeable Lens Digital Camera
ILCE-7SM3 α7SIII

SteadyShot Adjust. (still image/movie)

You can shoot with an appropriate SteadyShot setting for the attached lens.

1. **MENU → (Shooting) → [Image Stabilization] → [SteadyShot Adjust.] → desired setting.**

Menu item details

Auto:
Performs the SteadyShot function automatically according to the information obtained from the attached lens.

Manual:
Performs the SteadyShot function according to the focal-length set using [Focal Length]. (8mm-1000mm)

Note

- The SteadyShot function may not work optimally when the power has just been turned on, right after you point the camera towards a subject, or when the shutter button has been pressed all the way down without stopping halfway.
- When the camera cannot obtain focal length information from the lens, the SteadyShot function does not work correctly. Set [SteadyShot Adjust.] to [Manual] and set [Focal Length] to match the lens you are using. The current set value of the SteadyShot focal length will display to the side of (SteadyShot) icon.
- When using an SEL16F28 lens (sold separately) with a teleconverter, etc., set [SteadyShot Adjust.] to [Manual] and set the focal length.
- If a lens equipped with a SteadyShot switch is attached, the settings can only be changed using that switch on the lens. You cannot switch the settings using the camera.

Related Topic

- SteadyShot focal length (still image/movie)

5-021-326-12(1) Copyright 2020 Sony Corporation

Interchangeable Lens Digital Camera
ILCE-7SM3 α7SIII

SteadyShot focal length (still image/movie)

Sets the focal length information to be used for the built-in SteadyShot function when [SteadyShot Adjust.] is set to [Manual].

1 **MENU → (Shooting) → [Image Stabilization] → [Focal Length] → desired setting.**

Menu item details

8mm - 1000mm:
The SteadyShot function uses the focal length that you set.
Check the focal-length index on the lens and set the focal-length.

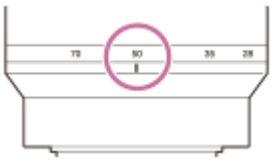

Related Topic

- SteadyShot Adjust. (still image/movie)

5-021-326-12(1) Copyright 2020 Sony Corporation

Interchangeable Lens Digital Camera
ILCE-7SM3 α7SIII

Lens Compensation (still image/movie)

Compensates for shading in the corners of the screen or distortion of the screen, or reduces color deviation at the corners of the screen caused by certain lens characteristics.

1. **MENU → (Shooting) → [Image Quality] → [Lens Compensation] → desired setting.**

Menu item details

Shading Comp.:
Sets whether to automatically compensate for darkness in the corners of the screen. ([Auto]/[Off])

Chromatic Aberration Comp.:
Sets whether to automatically reduce color deviation at the corners of the screen. ([Auto]/[Off])

Distortion Comp.:
Sets whether to automatically compensate for distortion of the screen. ([Auto]/[Off])

Note

- This function is only available when using an automatic compensation compliant lens.
- Darkness in the corners of the screen may not be corrected with [Shading Comp.], depending on the lens type.
- Depending on the attached lens, [Distortion Comp.] is fixed to [Auto], and you cannot select [Off].
- If [SteadyShot] is set to [Active] in the movie recording mode, [Distortion Comp.] will become locked to [Auto].

5-021-326-12(1) Copyright 2020 Sony Corporation

Long Exposure NR

When you set the shutter speed to 1 second(s) or longer (long exposure shooting), noise reduction is turned on for the duration that the shutter is open. With the function turned on, the grainy noise typical of long exposures is reduced.

1 **MENU → (Shooting) → [Image Quality] → [Long Exposure NR] → desired setting.**

Menu item details

On:
Activates noise reduction for the same duration that the shutter is open. When noise reduction is in progress, a message appears and you cannot take another picture. Select this to prioritize the image quality.

Off:
Does not activate noise reduction. Select this to prioritize the timing of shooting.

Note

- Noise reduction may not be activated even if [Long Exposure NR] is set to [On] in the following situations:
  - [Drive Mode] is set to [Cont. Shooting] or [Cont. Bracket].
- [Long Exposure NR] cannot be set to [Off] in the following shooting modes:
  - [Intelligent Auto]

5-021-326-12(1) Copyright 2020 Sony Corporation

Interchangeable Lens Digital Camera
ILCE-7SM3 α7SIII

High ISO NR

When shooting with high ISO sensitivity, the product reduces noise that becomes more noticeable when the product sensitivity is high.

1. **MENU → (Shooting) → [Image Quality] → [High ISO NR] → desired setting.**

Menu item details

Normal:
Activates high ISO noise reduction normally.

Low:
Activates high ISO noise reduction moderately.

Off:
Does not activate high ISO noise reduction. Select this to prioritize the timing of shooting.

Note

- [High ISO NR] is fixed to [Normal] in the following shooting modes:
  - [Intelligent Auto]
- When [File Format] is set to [RAW], this function is not available.
- [High ISO NR] does not work for RAW images when the [File Format] is [RAW & JPEG]/[RAW & HEIF].

5-021-326-12(1) Copyright 2020 Sony Corporation

Auto Review (still image)

You can check the recorded image on the screen right after the shooting. You can also set the display time for Auto Review.

1. **MENU → (Setup) → [Display Option] → [Auto Review] → desired setting.**

Menu item details

10 Sec/5 Sec/2 Sec:
Displays the recorded image on the screen right after shooting for the selected duration of time. If you perform a magnifying operation during Auto Review, you can check that image using the magnified scale.

Off:
Does not display the Auto Review.

Note

- When you use a function that performs image processing, the image before processing may be displayed temporarily, followed by the image after processing.
- The DISP (Display Setting) settings are applied for the Auto Review display.

Related Topic

- Enlarging an image being played back (Enlarge Image)

5-021-326-12(1) Copyright 2020 Sony Corporation

Interchangeable Lens Digital Camera
ILCE-7SM3 α7SIII

Remain Shoot Display (still image)

Sets whether or not to display an indicator of the remaining number of still images that can be continuously shot at the same shooting speed.

1. **MENU → (Setup) → [Display Option] → [Remain Shoot Display] → desired setting.**

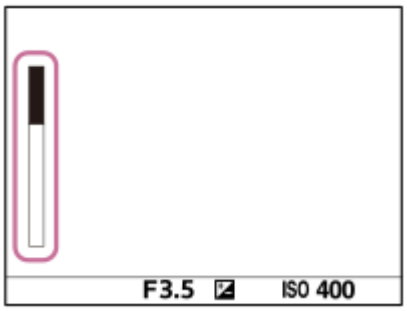

Menu item details

Always Display:
Always displays the indicator when shooting still images.

Shoot-Only Display:
During shooting, the remaining number of images that can be shot is always displayed. When you press the shutter button halfway down, the remaining number of images is displayed.

Not Displayed:
Does not display the indicator.

Hint

- When the internal camera memory for buffering is full, “SLOW” will be displayed and the continuous shooting speed will decrease.

Related Topic

- Cont. Shooting

5-021-326-12(1) Copyright 2020 Sony Corporation

Interchangeable Lens Digital Camera
ILCE-7SM3 α7SIII

Grid Line Display (still image/movie)

Sets whether the grid line is displayed or not during shooting. The grid line will help you to adjust the composition of images.

1. **MENU → (Shooting) → [Shooting Display] → [Grid Line Display] → desired setting.**

Menu item details

On:
Displays the grid line.

Off:
Does not display the grid line.

Hint

- If you assign [Grid Line Display Select] to a desired key using [Custom Key Setting] or [Custom Key Setting], you can show or hide the grid lines by pressing the assigned key.

Related Topic

- Grid Line Type (still image/movie)
- Assigning frequently used functions to buttons (Custom Key Setting)

5-021-326-12(1) Copyright 2020 Sony Corporation

Grid Line Type (still image/movie)

Sets the displayed type of grid line. The grid line will help you to adjust the composition of images.

1. **MENU → (Shooting) → [Shooting Display] → [Grid Line Type] → desired setting.**

Menu item details

Rule of 3rds Grid:
Place main subjects close to one of the grid lines that divide the image into thirds for a well-balanced composition.

Square Grid:
Square grids make it easier to confirm the horizontal level of your composition. This is useful for assessing the composition when shooting landscapes, closeups, or when performing camera scanning.

Diag. + Square Grid:
Place a subject on the diagonal line to express an uplifting and powerful feeling.

Hint

- If you assign [Grid Line Type] to a desired key using [Custom Key Setting] or [Custom Key Setting], you can switch the type of grid line each time you press the assigned key.

Related Topic

- Grid Line Display (still image/movie)
- Assigning frequently used functions to buttons (Custom Key Setting)

5-021-326-12(1) Copyright 2020 Sony Corporation

Interchangeable Lens Digital Camera
ILCE-7SM3 α7SIII

Live View Display Set.

Sets whether or not to show images altered with effects of the exposure compensation, white balance, [Creative Look], etc. on the screen.

1. **MENU → (Shooting) → [Shooting Display] → [Live View Display Set.] → desired setting.**

Menu item details

Live View Display:
Sets whether to reflect all the shooting settings on the monitor and display the Live View in conditions close to what your picture will look like once the settings are applied, or to display the Live View without reflecting the settings. ([Setting Effect ON] / [Setting Effect OFF])

If you select [Setting Effect OFF], you can easily check the composition even when shooting with the image composition on the Live View display.

Exposure Effect:
Sets whether or not to display the Live View with automatic correction by reflecting the exposure from the flash when [Live View Display] is set to [Setting Effect ON]. ([Exposure Set. & flash] / [Exposure Setting Only])

When using the flash for shooting a portrait, select [Exposure Setting Only] to manually set the exposure based on the ambient lighting.

Frame Rate Low Limit:
Sets whether or not to keep the frame rate of the Live View from becoming too slow. ([On] / [Off])

If you select [On], the frame rate of the Live View will not become slow even when shooting in a dark place, but the Live View display may become dark.

Hint

- When you use a third-party flash, such as a studio flash, Live View Display may be dark for some shutter speed settings. When [Live View Display] is set to [Setting Effect OFF], Live View Display will be displayed brightly, so that you can easily check the composition.
- If you select [Setting Effect OFF], Live View is always displayed with the appropriate brightness even in [Manual Exposure] mode.
- When [Setting Effect OFF] is selected, the VIEW (VIEW) icon is displayed on the Live View screen.

Note

- [Exposure Effect] is effective only when using a flash manufactured by Sony.
- [Live View Display] cannot be set to [Setting Effect OFF] in the following shooting modes:
  - [Intelligent Auto]
  - [Movie]
  - [S&Q Motion]
- When [Live View Display] is set to [Setting Effect OFF], the brightness of the shot image will not be the same as that of the displayed Live View.

5-021-326-12(1) Copyright 2020 Sony Corporation

Interchangeable Lens Digital Camera
ILCE-7SM3 α7SIII

Aperture Preview

While you press and hold the key to which you assigned the [Aperture Preview] function, the aperture is stepped down to the set aperture value and you can check the blurriness prior to shooting.

1. **MENU → (Setup) → [Operation Customize] → [Custom Key Setting] → set the [Aperture Preview] function to the desired key.**
2. **Confirm the image by pressing the key to which [Aperture Preview] was assigned.**

Hint

- Although you can change the aperture value during the preview, the subject may be defocused if you select a brighter aperture. We recommend that you adjust the focus again.

Related Topic

- Assigning frequently used functions to buttons (Custom Key Setting)
- Shot. Result Preview

5-021-326-12(1) Copyright 2020 Sony Corporation

Interchangeable Lens Digital Camera
ILCE-7SM3 α7SIII

Shot. Result Preview

While pressing down the key to which [Shot. Result Preview] is assigned, you can check the image preview with the DRO, shutter speed, aperture and ISO sensitivity settings applied. Check the shooting result preview before shooting.

1. **MENU → (Setup) → [Operation Customize] → [Custom Key Setting] → set the [Shot. Result Preview] function to the desired key.**
2. **Confirm the image by pressing the key to which [Shot. Result Preview] was assigned.**

Hint

- The DRO settings, shutter speed, aperture and ISO sensitivity settings you have set are reflected on the image for [Shot. Result Preview], but some effects cannot be previewed depending on the shooting settings. Even in that case, the settings you have selected will be applied to the images you shoot.

Related Topic

- Assigning frequently used functions to buttons (Custom Key Setting)
- Aperture Preview

5-021-326-12(1) Copyright 2020 Sony Corporation

Bright Monitoring

Allows you to adjust the composition when shooting in dark environments. By extending the exposure time, you can check the composition on the viewfinder/monitor even in dark locations such as under the night sky.

1. **MENU → (Setup) → [Operation Customize] → [Custom Key Setting] → assign the [Bright Monitoring] function to the desired key.**

2. **Press the key to which you assigned the [Bright Monitoring] function, then shoot an image.**
   - The brightness due to [Bright Monitoring] will continue after shooting.
   - To return the monitor brightness to normal, press the key to which you assigned the [Bright Monitoring] function once again.

Note

- During [Bright Monitoring], [Live View Display] will automatically switch to [Setting Effect OFF], and setting values such as exposure compensation will not be reflected in the live view display. It is recommended that you use [Bright Monitoring] only in dark locations.
- [Bright Monitoring] will be automatically cancelled in the following situations.
  - When the camera is turned off.
  - When the shooting mode is changed from P/A/S/M to a mode that is not P/A/S/M.
  - When the focus mode is set to other than manual focus.
  - When [Auto Magnifier in MF] is executed.
  - When [Focus Magnifier] is selected.
- During [Bright Monitoring], the shutter speed may be slower than normal while shooting in dark locations. Also, because the measured brightness range is expanded, the exposure may change.

Related Topic

- Live View Display Set.

5-021-326-12(1) Copyright 2020 Sony Corporation

Emph disp dur REC

Sets whether or not to display a red frame around the edges of the camera's monitor while recording a movie. You can easily check whether the camera is in standby or recording, even when you are looking at the camera monitor from an angle or at a distance.

1. **MENU → (Shooting) → [Shooting Display] → [Emph disp dur REC] → desired setting.**

Menu item details

On:
Displays a red frame to indicate that recording is in progress.

Off:
Does not display a frame to indicate that recording is in progress.

Hint

- The frame displayed by this function can also be output to an external monitor connected via HDMI. Set [HDMI Info. Display] to [On].

5-021-326-12(1) Copyright 2020 Sony Corporation

Interchangeable Lens Digital Camera
ILCE-7SM3 α7SIII

Marker Display

While shooting movies, you can set whether or not to display markers on the monitor or the viewfinder, and select the types of marker.

1 **MENU → (Shooting) → [Marker Display] → Select a menu item and set the desired parameter.**

Menu item details

Marker Display:
Sets whether or not to display markers. ([On] / [Off])

Center Marker:
Sets whether or not to display the center marker in the middle of the shooting screen. ([Off] / [On])

Aspect Marker:
Sets the aspect marker display. ([Off] / [4:3] / [13:9] / [14:9] / [15:9] / [1.66:1] / [1.85:1] / [2.35:1])

Safety Zone:
Sets the safety zone display. This becomes the standard range that can be received by a general household TV. ([Off] / [80%] / [90%])

Guideframe:
Sets whether or not to display the guide frame. You can verify whether the subject is level or perpendicular to the ground. ([Off] / [On])

Hint

- You can display several markers at the same time.
- Position the subject at the cross point of [Guideframe] to ensure a balanced composition.

Note

- The markers are displayed when the mode dial is set to (Movie) or S&Q (S&Q Motion), or when shooting movies.
- You cannot display markers when using [Focus Magnifier].
- The markers are displayed on the monitor or viewfinder. (You cannot output the markers.)

5-021-326-12(1) Copyright 2020 Sony Corporation

Interchangeable Lens Digital Camera
ILCE-7SM3 α7SIII

Gamma Display Assist

Movies with S-Log gamma are assumed to be processed after shooting in order to make use of the wide dynamic range. Images with the HLG gamma are assumed to be displayed on HDR-compatible monitors. They are therefore displayed in low contrast during shooting, and may be difficult to monitor. However, you can use the [Gamma Display Assist] function to reproduce contrast equivalent to that of normal gamma. In addition, [Gamma Display Assist] can also be applied when playing back movies on the camera's monitor/viewfinder.

1. **MENU → (Setup) → [Display Option] → [Gamma Display Assist] → desired setting.**

Menu item details

On:
Uses the gamma display assist function.

Off:
Does not use the gamma display assist function.

Hint

- If you assign [Gamma Disp. Assist Sel.] to a desired key using [Custom Key Setting], [Custom Key Setting], or [Custom Key Setting], you can turn the gamma display assist function on or off by pressing the assigned key.

Note

- [Gamma Display Assist] is not applied to movies when displayed on a TV or monitor connected to the camera.

Related Topic

- Picture Profile (still image/movie)
- Gamma Disp. Assist Typ.
- HLG Still Image

5-021-326-12(1) Copyright 2020 Sony Corporation

Gamma Disp. Assist Typ.

Selects the conversion type for [Gamma Display Assist].

1 **MENU → (Setup) → [Display Option] → [Gamma Disp. Assist Typ.] → desired setting.**

Menu item details

Auto:

- Displays images with effects as follows according to the gamma or color mode set in [Picture Profile].
  - When the gamma is set to [S-Log2]: [S-Log2→709(800%)]
  - When the gamma is set to [S-Log3]: [S-Log3→709(800%)]
  - When the gamma is set to [HLG], [HLG1], [HLG2], or [HLG3], and the color mode is set to [BT.2020]: [HLG(BT.2020)]
  - When the gamma is set to [HLG], [HLG1], [HLG2], or [HLG3], and the color mode is set to [709]: [HLG(709)]

- Displays images with an [HLG(BT.2020)] effect when shooting HLG still images with [HLG Still Image] set to [On].
- Displays images with an [S-Log3→709(800%)] effect when outputting RAW movies to another device connected via HDMI during movie shooting.

S-Log2→709(800%):
Displays images with an S-Log2 gamma reproducing contrast equivalent to ITU709 (800%).

S-Log3→709(800%):
Displays images with an S-Log3 gamma reproducing contrast equivalent to ITU709 (800%).

HLG(BT.2020):
Displays images after adjusting the image quality of the monitor or viewfinder to a quality that is almost the same as when images are displayed on an [HLG(BT.2020)] compatible monitor.

HLG(709):
Displays images after adjusting the image quality of the monitor or viewfinder to a quality that is almost the same as when images are displayed on an [HLG(709)] compatible monitor.

Hint

- If you assign [Gamma Disp. Assist Typ.] to a desired key using [Custom Key Setting] or [Custom Key Setting], you can switch the [Gamma Disp. Assist Typ.] setting each time you press the assigned key.

Note

- When [Gamma Display Assist] is set to [Auto] during playback, an effect is applied to the image as follows:
  - When playing back a movie recorded with [HLG], [HLG1], [HLG2], or [HLG3]: Displays the image with an [HLG(BT.2020)] or [HLG(709)] effect depending on the color mode.
  - When playing back an HLG still image shot with [HLG Still Image] set to [On]: Displays the image with an [HLG(BT.2020)] effect.
  - When playing back a RAW movie output to another device connected via HDMI: Displays the image with an [S-Log3→709(800%)] effect.

  In other situations, movies are displayed according to the gamma setting and color mode setting in [Picture Profile].

Related Topic

- Gamma Display Assist
- Picture Profile (still image/movie)
- HDMI Output Settings (movie)

5-021-326-12(1) Copyright 2020 Sony Corporation

Audio Recording

Sets whether to record sounds when shooting movies. Select [Off] to avoid recording the sounds of the lens and the camera operating.

1. **MENU → (Shooting) → [Audio Recording] → [Audio Recording] → desired setting.**

Menu item details

On:
Records sound (stereo).

Off:
Does not record sound.

Related Topic

- Audio Rec Level

5-021-326-12(1) Copyright 2020 Sony Corporation

Audio Rec Level

You can adjust the audio recording level while checking the level meter.

1. **MENU → (Shooting) → [Audio Recording] → [Audio Rec Level].**
2. **Select the desired level using the right/left sides of the control wheel.**

Menu item details

+:
Turns up the audio recording level.

-:
Turns down the audio recording level.

Hint

- When you record audio movies with loud volumes, set [Audio Rec Level] to a lower sound level. Doing so enables you to record more realistic audio. When you record audio movies with lower volumes, set [Audio Rec Level] to a greater sound level to make the sound easier to hear.
- To reset the audio recording level to the default setting, press the (Delete) button.

Note

- Regardless of the [Audio Rec Level] settings, the limiter always operates.
- [Audio Rec Level] is available only when the shooting mode is set to movie mode.
- [Audio Rec Level] is unavailable during slow-motion/quick-motion shooting.
- The [Audio Rec Level] settings are applied for both the internal microphone and the (microphone) terminal input.

5-021-326-12(1) Copyright 2020 Sony Corporation

Audio Out Timing

You can set echo cancellation during audio monitoring and prevent undesirable deviations between video and audio during HDMI output.

1. **MENU → (Shooting) → [Audio Recording] → [Audio Out Timing] → desired setting.**

Menu item details

Live:
Outputs audio without delay. Select this setting when audio deviation is a problem during audio monitoring.

Lip Sync:
Outputs audio and video in sync. Select this setting to prevent undesirable deviations between video and audio.

Note

- Using an external microphone may result in a slight delay. For details, refer to the operating instructions supplied with the microphone.

5-021-326-12(1) Copyright 2020 Sony Corporation

Wind Noise Reduct.

Sets whether or not to reduce wind noise by cutting the low-range sound of the input audio from the built-in microphone.

1. **MENU → (Shooting) → [Audio Recording] → [Wind Noise Reduct.] → desired setting.**

Menu item details

On:
Reduces wind noise.

Off:
Does not reduce wind noise.

Note

- Setting this item to [On] where wind is not blowing sufficiently hard may cause normal sound to be recorded with too low volume.
- When an external microphone (sold separately) is used, [Wind Noise Reduct.] does not function.

5-021-326-12(1) Copyright 2020 Sony Corporation

Interchangeable Lens Digital Camera
ILCE-7SM3 α7SIII

Shoe Audio Set.

Sets the digital audio transmitted from a microphone (sold separately) attached to the multi-interface shoe of the camera. Use a microphone that supports the digital audio interface. You can set the sampling frequency, the number of quantization bits, and the number of channels.

1 **MENU → (Shooting) → [Audio Recording] → [Shoe Audio Set.] → desired setting.**

Menu item details

48khz/24bit 4ch :
Sets the sampling frequency of audio input to 48 kHz, the number of quantization bits to 24 bits, and the number of channels to 4.

48khz/24bit 2ch :
Sets the sampling frequency of audio input to 48 kHz, the number of quantization bits to 24 bits, and the number of channels to 2.

48khz/16bit 2ch :
Sets the sampling frequency of audio input to 48 kHz, the number of quantization bits to 16 bits, and the number of channels to 2.

Hint

- The audio level display on the monitor is for 4 channels during 4-channel audio recording.

Note

- When an external microphone (sold separately) is connected to the (microphone) terminal of the camera, the audio is recorded from the external microphone attached to the (microphone) terminal. You cannot set [Shoe Audio Set.].
- If the attached microphone is set to analog transmission, you cannot set [Shoe Audio Set.].
- When the attached microphone does not support 4-channel audio recording, you cannot select [48khz/24bit 4ch] (48khz/24bit 4ch).
- When the attached microphone does not support 24-bit audio recording, [Shoe Audio Set.] becomes locked to [48khz/16bit 2ch] (48khz/16bit 2ch).
- Audio cannot be recorded correctly in the following situations during movie recording:
  - When you attach or remove the microphone
  - When digital transmission is switched to analog transmission or vice versa on the microphone side

Related Topic

- 4ch Audio Monitoring (movie)

5-021-326-12(1) Copyright 2020 Sony Corporation

Interchangeable Lens Digital Camera
ILCE-7SM3 α7SIII

Audio Level Display

Sets whether to display the audio level on the screen.

1 **MENU → (Shooting) → [Audio Recording] → [Audio Level Display] → desired setting.**

Menu item details

On:
Displays the audio level.

Off:
Does not display the audio level.

Note

- The audio level is not displayed in the following situations:
  - When [Audio Recording] is set to [Off].
  - When DISP (Display Setting) is set to [No Disp. Info.].
  - During slow-motion/quick-motion shooting
- The audio level is also displayed while shooting stand-by in movie recording mode.

5-021-326-12(1) Copyright 2020 Sony Corporation

Interchangeable Lens Digital Camera
ILCE-7SM3 α7SIII

TC/UB

The time code (TC) and the user bit (UB) information can be recorded as data attached to movies.

1 MENU → (Shooting) → [TC/UB] → Select a menu item and set the desired parameter.

Menu item details

Time Code Preset:
Sets the time code.

User Bit Preset:
Sets the user bit.

Time Code Format:
Sets the recording method for the time code. (Only when [NTSC/PAL Selector] is set to NTSC.)

Time Code Run:
Sets the count up format for the time code.

Time Code Make:
Sets the recording format for the time code on the recording medium.

User Bit Time Rec:
Sets whether or not to record the time as a user bit.

How to set the time code (Time Code Preset)

1. MENU → (Shooting) → [TC/UB] → [Time Code Preset].
2. Turn the control wheel and select the first two digits.
   - The time code can be set between the following range.
     When [60p] is selected: 00:00:00.00 to 23:59:59.29
     * When [24p] is selected, you can select the last two digits of the time code in multiples of four from 0 to 23 frames.
       When [50p] is selected: 00:00:00.00 to 23:59:59.24
3. Set the other digits following the same procedure as in step 2, then press in the center of the control wheel.

How to reset the time code

1. MENU → (Shooting) → [TC/UB] → [Time Code Preset].
2. Press the (Delete) button to reset the time code (00:00:00.00).

How to set the user bit (User Bit Preset)

1. MENU → (Shooting) → [TC/UB] → [User Bit Preset].
2. Turn the control wheel and select the first two digits.
3. Set the other digits following the same procedure as in step 2, then press in the center of the control wheel.

How to reset the user bit

1. MENU → (Shooting) → [TC/UB] → [User Bit Preset].
2. Press the (Delete) button to reset the user bit (00 00 00 00).

How to select the recording method for the time code (Time Code Format [*1])

1. MENU → (Shooting) → [TC/UB] → [Time Code Format].

DF:

Records the time code in Drop Frame[*2] format.

NDF:

Records the time code in Non-Drop Frame format.

*1 Only when [NTSC/PAL Selector] is set to NTSC.

*2 The time code is based on 30 frames per second. However, a gap between the actual time and the time code will occur during extended periods of recording as the frame frequency of the NTSC image signal is approximately 29.97 frames per second. Drop frame corrects this gap to make the time code and actual time equal. In drop frame, the first 2 frame numbers are removed every minute except for every tenth minute. The time code without this correction is called non-drop frame.

- The setting is fixed to [NDF] when recording in 4K/24p or 1080/24p.

How to select the count up format for the time code (Time Code Run)

1. MENU → (Shooting) → [TC/UB] → [Time Code Run].

Rec Run:

Sets the stepping mode for the time code to advance only while recording. The time code is recorded sequentially from the last time code of the previous recording.

Free Run:

Sets the stepping mode for the time code to advance anytime, regardless of the camera operation.

- The time code may not be recorded sequentially in the following situations even when the time code advances in [Rec Run] mode.
  - When the recording format is changed.
  - When the recording medium is removed.

How to select how the time code is recorded (Time Code Make)

1. MENU → (Shooting) → [TC/UB] → [Time Code Make].

Preset:

Records the newly set time code on the recording medium.

Regenerate:

Reads the last time code for the previous recording from the recording medium and records the new time code consecutively from the last time code. The time code advances in the [Rec Run] mode regardless of the [Time Code Run] setting.

The time code read differs as follows, depending on the [Recording Mode] setting in [Rec. Media Settings].

- When [Recording Mode] is set to [Simult. ( )] or [Simult. (/)], the time code is read from the memory card in the slot 1.
- When [Recording Mode] is set to the following, the time code is read from the memory card to which movies will be recorded.
  - [Standard]
  - [Simult. ( )]
  - [Sort(RAW/JPEG)]
  - [Sort (RAW/HEIF)]
  - [Sort (HEIF/RAW)]
  - [Sort(/)]

Related Topic

- TC/UB Disp. Setting

5-021-326-12(1) Copyright 2020 Sony Corporation

Interchangeable Lens Digital Camera
ILCE-7SM3 α7SIII

TC/UB Disp. Setting

Sets the display of the recording time counter, time code (TC), and user bit (UB) for movies.

1 **MENU → (Setup) → [Display Option] → [TC/UB Disp. Setting] → desired setting.**

Menu item details

Counter:
Displays the time counter of movie recording.

TC:
Displays the time code.

U-Bit:
Displays the user bit.

Related Topic

- TC/UB

5-021-326-12(1) Copyright 2020 Sony Corporation

Interchangeable Lens Digital Camera
ILCE-7SM3 α7SIII

Contents of this chapter

The following table of contents lists the features described in this chapter (“Customizing the camera”). From each item name, you can jump to the page describing the respective functions.

Customization features of the camera

Assigning frequently used functions to buttons (Custom Key Setting)

Changing the function of the dial temporarily (My Dial Settings)

Registering and recalling camera settings

- Camera Set. Memory
- Recall Camera Setting
- Memory/Recall Media
- Registering shooting settings to a custom key (Reg. Custom Shoot Set)

Registering frequently used functions to the function menu

- Fn Menu Settings

Registering frequently used functions to My Menu

- Add Item
- Sort Item
- Delete Item
- Delete Page
- Delete All
- Display From My Menu

Separately adjusting the camera settings for still images and movies

- Different Set for Still/Mv

Customizing the functions of the ring/dial

- Dial Setup
- Av/Tv Rotate
- Function Ring(Lens)
- Lock Operation Parts

Recording movies by pressing the shutter button

- REC w/ Shutter (movie)

Monitor/viewfinder settings

- Select Finder/Monitor
- DISP (Screen Disp) Set (Monitor/Finder)

5-021-326-12(1) Copyright 2020 Sony Corporation

Interchangeable Lens Digital Camera
ILCE-7SM3 α7SIII

Customization features of the camera

The camera has various customization features such as registration of functions and shooting settings to custom keys. You can combine your preferred settings to customize the camera for easier operation.
For details on how to configure the settings and use them, refer to the page for each function.

To assign frequently used functions to buttons (Custom Key Setting/ Custom Key Setting/ Custom Key Setting)

You can change the functions of the buttons including the Custom Buttons (C1 to C4) according to your preferences. It is recommended that you assign frequently used functions to easily operable buttons so that you can call up the assigned functions simply by pressing the corresponding button.

To register frequently used functions to the Fn button (Function menu)

If you register functions frequently used in the shooting mode to the Function menu, you can display the registered functions on the screen simply by pressing the Fn (Function) button. On the Function menu screen, you can recall the function you want to use by selecting the icons.

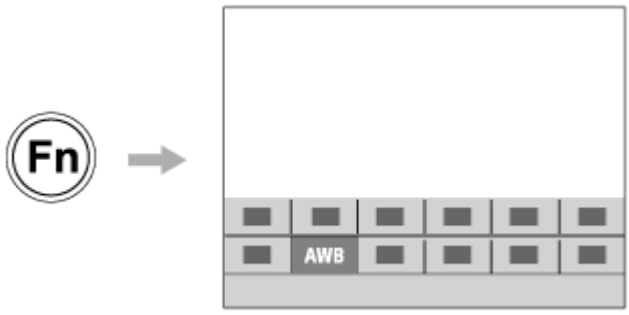

To combine frequently used functions on the menu screen (My Menu)

If you combine the frequently used items from menus such as the shooting and network menu on the “My Menu” screen, you can quickly access the desired menu items.

To assign different functions to the dial and switch the function of the dial (My Dial Settings)

You can assign the desired functions to the front/rear dial and the control wheel, and register up to three combinations of settings to the camera as “My Dial 1 - 3” settings.

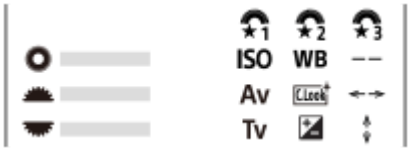

Example: [My Dial Settings] screen for models with a front/rear dial

To change the shooting settings quickly according to the scene (MR Camera Set. Memory)

You can register the appropriate shooting settings* for scene to the camera or a memory card, and call up the settings easily by using the mode dial, etc.

* You cannot register custom key settings.

To save the customized camera settings to a memory card (Save/Load Settings)

You can save camera settings* to a memory card using [Save/Load Settings]. This function is useful when you want to back up the settings, or to import the settings to another camera of the same model, etc.

* Some settings cannot be saved on a memory card.

Related Topic

- Assigning frequently used functions to buttons (Custom Key Setting)
- Using the Fn (Function) button
- Add Item
- Changing the function of the dial temporarily (My Dial Settings)
- Camera Set. Memory
- Save/Load Settings

5-021-326-12(1) Copyright 2020 Sony Corporation

Interchangeable Lens Digital Camera
ILCE-7SM3 α7SIII

Assigning frequently used functions to buttons (Custom Key Setting)

You can use the custom key function to assign the functions you use most frequently to easily operable keys. This lets you skip the process of selecting items from MENU, so you can recall the functions more quickly.

You can separately assign functions to custom keys for the still image shooting mode, movie shooting mode, and playback mode.

- Assignable functions vary depending on the keys.

You can assign functions to the following keys.

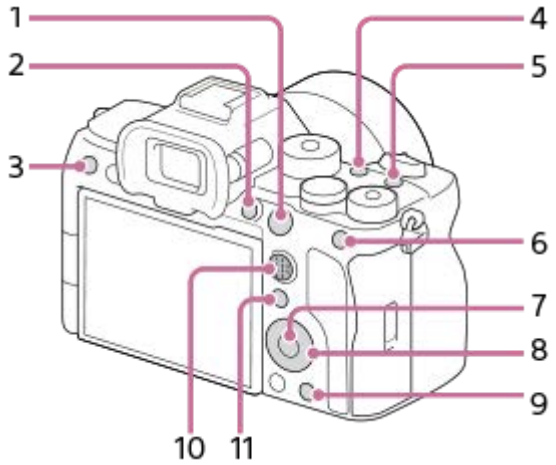

1. AF-ON Button
2. Custom Button 1
3. Custom Button 3
4. Custom Button 2
5. MOVIE Button
6. AEL Button
7. Center Button
8. Control Wheel/Left Button/Right Button/Down Button
9. Custom Button 4
10. Multi-Slc Center Btn
11. Fn/ Button

For details on custom key settings, refer to the following URL:
https://support.d-imaging.sony.co.jp/support/tutorial/ilc/ilce-7sm3/l/custom.php

The following is the procedure for assigning the [Eye AF] function to the AEL button.

1. **MENU → (Setup) → [Operation Customize] → [Custom Key Setting].**
   - If you want to assign a function to recall while shooting movies, select [Custom Key Setting]. If you want to assign a function to recall while playing back images, select [Custom Key Setting].
2. **Move to the [Rear1] screen using the top/bottom side of the control wheel. Then, select [AEL Button] and press the center of the control wheel.**

3 **Select [Eye AF] using the top/bottom/left/right side of the control wheel, and then press the center.**

- If you press the AEL button in the still image shooting mode and eyes are detected, [Eye AF] will activate, and the camera will focus on the eyes. Shoot images while holding down the AEL button.

Hint

- You can also assign shooting functions to the focus hold button on the lens. However, some lenses do not have a focus hold button.

Related Topic

- Changing the function of the dial temporarily (My Dial Settings)
- Fn Menu Settings

5-021-326-12(1) Copyright 2020 Sony Corporation

Interchangeable Lens Digital Camera
ILCE-7SM3 α7SIII

Changing the function of the dial temporarily (My Dial Settings)

You can assign the desired functions to the front dial, rear dial, and control wheel, and register up to three combinations of settings as “My Dial” settings. You can quickly recall or switch registered “My Dial” settings by pressing the custom key you assigned in advance.

Registering functions to “My Dial”

Register the functions that you want to assign to the front dial, the rear dial, and the control wheel as [My Dial 1] through [My Dial 3].

1. MENU → (Setup) → [Dial Customize] → [My Dial Settings].
2. Select a dial or wheel for (My Dial 1), and press the center of the control wheel.
3. Select the desired function to assign using the top/bottom/left/right sides of the control wheel, and then press the center of the control wheel.
   - Select “--” (Not set) for a dial or wheel to which you do not want to assign any function.
4. After you select functions for all of the dials and the wheel in (My Dial 1) by repeating Steps 2 and 3, select [OK]. The settings for (My Dial 1) will be registered.
   - If you want to register (My Dial 2) and (My Dial 3) as well, follow the same procedure as described above.

Assigning a key to recall “My Dial”

Assign a custom key to recall the registered “My Dial” settings.

1. MENU → (Setup) → [Operation Customize] → [Custom Key Setting] or [Custom Key Setting] → Select the key that you want to use to recall “My Dial.”
2. Select the number of the “My Dial” setting that you want to recall or the pattern for switching “My Dial.”

Menu item details

My Dial 1 during Hold /My Dial 2 during Hold/My Dial 3 during Hold:
While you hold down the key, the functions that you registered in [My Dial Settings] are assigned to the dial/wheel.

My Dial 1→2→3 :
Each time you press the key, the function changes in the following sequence: “Normal function → Function of My Dial 1 → Function of My Dial 2 → Function of My Dial 3 → Normal function.”

Toggle My Dial 1 /Toggle My Dial 2/Toggle My Dial 3:
The function registered using [My Dial Settings] is maintained even if you do not hold down the key. Press the key again to return to the normal function.

Shooting while switching “My Dial”

During shooting, you can recall “My Dial” using the custom key, and shoot as you change the shooting setting by turning the front dial, the rear dial, and the control wheel.

In the following example, the functions listed below are registered to "My Dial," and [My Dial 1→2→3] is assigned to the C1 (Custom 1) button.

Operation part	My Dial 1	My Dial 2	My Dial 3
Control wheel	ISO	White Balance	Not set
Front dial	Av	Creative Look	Move AF Frame ↔ : Std
Rear dial	Tv	Exposure Comp.	Move AF Frame ↕ : Std

1. Press the C1 (Custom1) button.
   The functions registered to [My Dial 1] will be assigned to the control wheel, the front dial, and the rear dial.

   - The icons for the functions registered to [My Dial 1] are displayed in the lower part of the screen.

2. Turn the control wheel to set the ISO value, turn the front dial to set the aperture value, and turn the rear dial to set the shutter speed.
3. Press the C1 button again. The functions registered to [My Dial 2] will be assigned to the control wheel, the front dial, and the rear dial.
4. Turn the control wheel to set [White Balance], turn the front dial to set [Creative Look], and turn the rear dial to set [Exposure Comp.].
5. Press the C1 button again, and change the setting values for the functions registered to [My Dial 3].
6. Press the shutter button to shoot.

Note

- “My Dial” settings in which every dial/wheel is set to [Not set] are not recalled when you press the custom key. They are also skipped in [My Dial 1→2→3].
- Even if a dial/wheel has been locked using the [Lock Operation Parts] function, it will be unlocked temporarily when “My Dial” is recalled.

Related Topic

- Assigning frequently used functions to buttons (Custom Key Setting)

5-021-326-12(1) Copyright 2020 Sony Corporation

Camera Set. Memory

Allows you to register up to 3 often-used modes or product settings to the product and up to 4 (M1 through M4) to the memory card. You can recall the settings using just the mode dial.

1. **Set the product to the setting you want to register.**
2. **MENU → (Shooting) → [Shooting Mode] → [MR Camera Set. Memory] → desired number.**
3. **Press the center of the control wheel to confirm.**

Items that can be registered

- You can register various functions for shooting. The items that can actually be registered are displayed on the menu of the camera.
- Aperture (F number)
- Shutter speed

To change registered settings

Change the setting to the desired one and re-register the setting to the same mode number.

Note

- M1 through M4 can be selected only when a memory card is inserted into the product.
- When registering the settings on a memory card, only a memory card that has been selected using [MR Memory/Recall Media] can be used.
- Program Shift cannot be registered.

Related Topic

- Recall Camera Setting
- Memory/Recall Media

5-021-326-12(1) Copyright 2020 Sony Corporation

Recall Camera Setting

Allows you to shoot an image after recalling your preferred shooting settings registered with [MR Camera Set. Memory].

1. **Set the mode dial to 1, 2, or 3 (MR Recall Camera Setting).**
2. **Press the center of the control wheel to confirm.**
   - You can also recall registered modes or settings by selecting MENU → (Shooting) → [Shooting Mode] → [MR Recall Camera Setting].

Hint

- To recall settings registered to the memory card, set the mode dial to 1, 2, 3 (MR Recall Camera Setting), then select the desired number by pressing the left/right side of the control wheel.
- If you recall settings registered to the memory card, the settings are recalled from the memory card in the slot specified in [MR Memory/Recall Media]. You can confirm the memory card slot by selecting MENU → (Shooting) → [Shooting Mode] → [MR Memory/Recall Media].
- Settings registered to a memory card using another camera of the same model name can be recalled with this camera.

Note

- If you set [MR Recall Camera Setting] after completing the shooting settings, the registered settings are given priority and the original settings may become invalid. Check the indicators on the screen before shooting.

Related Topic

- Camera Set. Memory
- Memory/Recall Media

5-021-326-12(1) Copyright 2020 Sony Corporation

Interchangeable Lens Digital Camera
ILCE-7SM3 α7SIII

Memory/Recall Media

Selects the memory card slot from which settings are recalled or to which settings are registered for M1 through M4.

1 **MENU → (Shooting) → [Shooting Mode] → [MR Memory/Recall Media] → desired slot.**

Menu item details

Slot 1:
Selects the slot 1.

Slot 2:
Selects the slot 2.

Related Topic

- Camera Set. Memory
- Recall Camera Setting

5-021-326-12(1) Copyright 2020 Sony Corporation

Interchangeable Lens Digital Camera
ILCE-7SM3 α7SIII

Registering shooting settings to a custom key (Reg. Custom Shoot Set)

You can register shooting settings (such as exposure, focus setting, drive mode, etc.) to a custom key in advance and temporarily recall them while holding down the key. Simply press the custom key to switch the settings quickly and release the key to go back to the original settings. This function is useful when recording active scenes such as sports.

1. **MENU → (Shooting) → [Shooting Mode] → [Reg. Custom Shoot Set] → Select a registration number from [Recall Custom hold 1] to [Recall Custom hold 3].**

   The setting screen for the selected number will be displayed.

2. **Using the top/bottom/left/right side of the control wheel, select the check boxes for the functions that you want to recall with one of the registration numbers and press the center to check each box.**

   A ✓ (check) mark will be displayed in the boxes for the functions.
   - To cancel a selection, press the center again.

3. **Select the function that you want to adjust using the top/bottom/left/right side of the control wheel, and press the center to adjust the function to the desired setting.**
   - Select [Import Current Setting] to register the current settings of the camera to the registration number that you chose.

4. **Select [Register].**

Items that can be registered

- You can register various functions for shooting. The items that can actually be registered are displayed on the menu of the camera.
- Exposure
- Focus setting
- Drive mode (other than self-timer)

To recall registered settings

1. MENU → (Setup) → [Operation Customize] → [Custom Key Setting] → Select the desired key and then select one of the registration numbers from [Recall Custom hold 1] to [Recall Custom hold 3].
2. On the shooting screen, press the shutter button while holding down the key to which you assigned one of the registration numbers.
   The registered settings are activated while you are holding down the custom key.

Hint

- You can change the settings for [Reg. Custom Shoot Set] after assigning one of the registration numbers to the custom key using [Custom Key Setting].

Note

- The registration numbers [Recall Custom hold 1] through [Recall Custom hold 3] are available only when the shooting mode is set to P/A/S/M.

- Depending on the attached lens and the status of the camera when the registered setting recall is executed, the registered settings may not take effect.

Related Topic

- Assigning frequently used functions to buttons (Custom Key Setting)

5-021-326-12(1) Copyright 2020 Sony Corporation

Interchangeable Lens Digital Camera
ILCE-7SM3 α7SIII

Fn Menu Settings

The Function menu is a menu of 12 functions that is displayed at the bottom of the screen when you press the Fn (Function) button in the shooting mode.
You can register 12 functions to the Function menus for still image shooting and movie shooting, respectively.

The following is the procedure for changing [Drive Mode] in the still image function menu to [Grid Line Display].

- To change the movie function menu, select a movie function menu item in Step 2.

1. **MENU → (Setup) → [Operation Customize] → select [Fn Menu Settings].**

2. **Select (Drive Mode) from among the 12 still image function menu items using the top/bottom/left/right side of the control wheel, and then press the center.**

3. **Move to the screen showing [Grid Line Display] using the left/right side of the control wheel. Then, select [Grid Line Display] and press the center of the control wheel.**
   - (Grid Line Display) will be displayed in the former location of (Drive Mode) in the Function menu.

Related Topic

- Using the Fn (Function) button

5-021-326-12(1) Copyright 2020 Sony Corporation

Interchangeable Lens Digital Camera
ILCE-7SM3 α7SIII

Add Item

You can register the desired menu items to ☆ (My Menu) under MENU.

1. **MENU → ☆ (My Menu) → [My Menu Setting] → [Add Item].**
2. **Select an item that you want to add to ☆ (My Menu) using the top/bottom/left/right sides of the control wheel.**
3. **Select a destination using the top/bottom/left/right sides of the control wheel.**

Hint

- You can add up to 42 items to ☆ (My Menu).

Note

- You cannot add the following items to ☆ (My Menu).
  - Any item under MENU → ▶ (Playback)

Related Topic

- Sort Item
- Delete Item
- Using the MENU button

5-021-326-12(1) Copyright 2020 Sony Corporation

Interchangeable Lens Digital Camera
ILCE-7SM3 α7SIII

Sort Item

You can rearrange the menu items added to ☆ (My Menu) under MENU.

1. **MENU → ☆ (My Menu) → [My Menu Setting] → [Sort Item].**
2. **Select an item that you want to move using the top/bottom/left/right sides of the control wheel.**
3. **Select a destination using the top/bottom/left/right sides of the control wheel.**

Related Topic

- Add Item

5-021-326-12(1) Copyright 2020 Sony Corporation

Interchangeable Lens Digital Camera
ILCE-7SM3 α7SIII

Delete Item

You can delete menu items added to ☆ (My Menu) of MENU.

1. **MENU → ☆ (My Menu) → [My Menu Setting] → [Delete Item].**
2. **Select an item that you want to delete using the top/bottom/left/right sides of the control wheel, and then press the center to delete the selected item.**

Hint

- To delete all the items on a page, select MENU → ☆ (My Menu) → [My Menu Setting] → [Delete Page].
- You can delete all the items added to ☆ (My Menu) by selecting MENU → ☆ (My Menu) → [My Menu Setting] → [Delete All].

Related Topic

- Delete Page
- Delete All
- Add Item

5-021-326-12(1) Copyright 2020 Sony Corporation

Interchangeable Lens Digital Camera
ILCE-7SM3 α7SIII

Delete Page

You can delete all the menu items added to a page under ☆ (My Menu) in MENU.

1. **MENU → ☆ (My Menu) → [My Menu Setting] → [Delete Page].**
2. **Select a page that you want to delete using the left/right sides of the control wheel, and then press the center of the control wheel to delete the items.**

Related Topic

- Delete All
- Add Item

5-021-326-12(1) Copyright 2020 Sony Corporation

Interchangeable Lens Digital Camera
ILCE-7SM3 α7SIII

Delete All

You can delete all the menu items added to ☆ (My Menu) in MENU.

1. **MENU → ☆ (My Menu) → [My Menu Setting] → [Delete All].**
2. **Select [OK].**

Related Topic

- Delete Page
- Add Item

5-021-326-12(1) Copyright 2020 Sony Corporation

Interchangeable Lens Digital Camera
ILCE-7SM3 α7SIII

Display From My Menu

You can set My Menu to appear first when you press the MENU button.

1 **MENU → ☆ (My Menu) → [My Menu Setting] → [Display From My Menu] → desired setting.**

Menu item details

On:
My Menu appears first when you press the MENU button.

Off:
The most recently displayed menu appears when you press the MENU button.

Related Topic

- Add Item
- Using the MENU button

5-021-326-12(1) Copyright 2020 Sony Corporation

Different Set for Still/Mv

For each item in still image shooting and movie recording, you can select whether to use a common setting or separate settings.

1. **MENU → (Setup) → [Operation Customize] → Select [Different Set for Still/Mv].**

   The operation guide screen will appear. Select [OK] to display the setting screen.

2. **Add check marks to the items that you want to set separately for still image shooting and movie recording, and then select [OK].**

   - You can set the following items separately for still image shooting and movie recording.
     - Aperture
     - Shutter Speed
     - ISO
     - Exposure Comp.
     - Metering Mode
     - White Balance
     - Picture Profile
     - Focus Mode

Hint

- When you switch from a common setting to separate settings with [Different Set for Still/Mv], the current settings are applied to both still image shooting and movie recording. However, the custom white balance setting is only applied to still image shooting.
- When you switch from separate settings to a common setting with [Different Set for Still/Mv], the setting values of items return to their initial values. As an exception, the setting values for still image shooting are applied to the aperture value, shutter speed, and custom white balance settings.

Note

- Even if you add a check mark to [Exposure Comp.], the exposure compensation value will be simultaneously changed for both still image shooting and movie recording when you change the exposure compensation value with the exposure compensation dial.

5-021-326-12(1) Copyright 2020 Sony Corporation

Interchangeable Lens Digital Camera
ILCE-7SM3 α7SIII

Dial Setup

When the shooting mode is set to “M”, you can switch the functions of the front/rear dial.

1 **MENU → (Setup) → [Dial Customize] → [Dial Setup] → desired setting.**

Menu item details

Tv Av:
The front dial is used to change the shutter speed and the rear dial to change the aperture value.
Av Tv:
The front dial is used to change the aperture value and the rear dial to change the shutter speed.

5-021-326-12(1) Copyright 2020 Sony Corporation

Interchangeable Lens Digital Camera
ILCE-7SM3 α7SIII

Av/Tv Rotate

Sets the direction of rotation for the front dial, rear dial, or control wheel when changing the aperture value or shutter speed.

1. **MENU → (Setup) → [Dial Customize] → [Av/Tv Rotate] → desired setting.**

Menu item details

Normal:
Does not change the direction of rotation for the front dial, rear dial, or control wheel.

Reverse:
Reverses the direction of rotation for the front dial, rear dial, or control wheel.

5-021-326-12(1) Copyright 2020 Sony Corporation

Interchangeable Lens Digital Camera
ILCE-7SM3 α7SIII

Function Ring(Lens)

You can choose which of the following functions to assign to the function ring on the lens: power-assisted focusing (power focus), or switching the angle of view between full frame and APS-C/Super 35 mm (available only with compatible lenses).

For details, refer to the operating instructions supplied with the lens.

1 **MENU → (Setup) → [Dial Customize] → [Function Ring(Lens)]→ desired setting.**

Menu item details

Power Focus:
The focusing position moves toward infinity when you turn the function ring to the right. The focusing position moves to the closer range when you turn the function ring to the left.

APS-C S35 /Full Frame:
The angle of view switches between full frame and APS-C/Super 35 mm when the function ring is turned.

- The angle of view switches regardless of the direction in which you turn the function ring.

Related Topic

- APS-C S35 (Super35mm) Shooting (still image/movie)

5-021-326-12(1) Copyright 2020 Sony Corporation

Interchangeable Lens Digital Camera
ILCE-7SM3 α7SIII

Lock Operation Parts

You can set whether the multi-selector, dials, and wheel can be locked by pressing and holding down the Fn (Function) button.

1. **MENU → (Setup) → [Dial Customize] → [Lock Operation Parts] → desired setting.**
   - To lock the operating parts, hold down the Fn (Function) button until the message “Locked.” appears on the monitor.

Menu item details

Off:
Does not lock the multi-selector, front dial, rear dial, or control wheel even if you press and hold down the Fn (Function) button.

Multi-Selector Only:
Locks the multi-selector.

Dial + Wheel:
Locks the front dial, rear dial, and control wheel.

All:
Locks the multi-selector, front dial, rear dial, and control wheel.

Hint

- You can release the lock by holding the Fn (Function) button down again.

Note

- If you set [AF Area Registration] to [On], [Lock Operation Parts] will be fixed to [Off].

Related Topic

- Registering the current focus area (AF Area Registration)

5-021-326-12(1) Copyright 2020 Sony Corporation

Interchangeable Lens Digital Camera
ILCE-7SM3 α7SIII

REC w/ Shutter (movie)

You can start or stop recording movies by pressing the shutter button, which is bigger and easier to press than the MOVIE (Movie) button.

1. **MENU → (Setup) → [Operation Customize] → [REC w/ Shutter] → desired setting.**

Menu item details

On:
Enables movie recording using the shutter button when the shooting mode is set to [Movie] or [S&Q Motion].

Off:
Disables movie recording using the shutter button.

Hint

- When [REC w/ Shutter] is set to [On], you can use the shutter button to start or stop recording movies on an external recording/playback device using [REC Control].

Note

- When [REC w/ Shutter] is set to [On], you cannot focus by pressing the shutter button halfway down during movie recording.

Related Topic

- Shooting movies

5-021-326-12(1) Copyright 2020 Sony Corporation

Interchangeable Lens Digital Camera
ILCE-7SM3 α7SIII

Select Finder/Monitor

Sets the method for switching the display between the viewfinder and the monitor.

1. **MENU → (Setup) → [Finder/Monitor] → [Select Finder/Monitor] → desired setting.**

Menu item details

Auto:
When you look into the viewfinder, the eye sensor reacts and the display is switched to the viewfinder automatically.

VF(Manual):
The monitor is turned off and the image is displayed only in the viewfinder.

Monitor(Manual):
The viewfinder is turned off and the image is always displayed on the monitor.

Hint

- You can assign the [Select Finder/Monitor] function to your preferred key.
  [Custom Key Setting], [Custom Key Setting] or [Custom Key Setting] → set [Finder/Monitor Sel.] to the preferred key.
- If you want to retain the viewfinder display or the monitor display, set [Select Finder/Monitor] to [VF(Manual)] or [Monitor(Manual)] beforehand.
  You can keep the monitor off when you take your eyes off the viewfinder during recording by setting the monitor display to [Monitor Off] using the DISP button. Select [DISP (Screen Disp) Set] → [Monitor] and add a check mark to [Monitor Off] beforehand.

Note

- Depending on whether the monitor is open or closed and the angle of the monitor, the eye sensor of the camera may not detect your eye approaching even if [Select Finder/Monitor] is set to [Auto].
- Under strong light sources such as sunlight, the eye sensor may not detect your eye approaching and the display may not switch to the viewfinder even when [Select Finder/Monitor] is set to [Auto]. In such cases, keep the eye sensor from being exposed to the light source.

Related Topic

- Assigning frequently used functions to buttons (Custom Key Setting)
- DISP (Screen Disp) Set (Monitor/Finder)

5-021-326-12(1) Copyright 2020 Sony Corporation

Interchangeable Lens Digital Camera
ILCE-7SM3 α7SIII

DISP (Screen Disp) Set (Monitor/Finder)

Allows you to set the screen display modes that can be selected using DISP (Display Setting) in shooting mode.

1. **MENU → (Setup) → [Operation Customize] → [DISP (Screen Disp) Set] → [Monitor] or [Finder] → desired setting → [Enter].**

   The items marked with ✓ (check) are available.

Menu item details

Display All Info. :
Shows recording information.

No Disp. Info. :
Does not show recording information.

Histogram :
Displays the luminance distribution graphically.

Level :
Indicates whether the product is level in both the front-back **(A)** and horizontal **(B)** directions. When the product is level in either direction, the indicator turns to green.

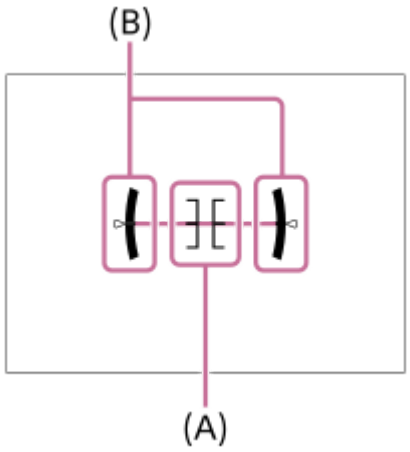

For viewfinder*:
Displays only shooting information on the monitor, not the subject. This setting is a display setting for shooting with the viewfinder.

Monitor Off*:
Always turns the monitor off when shooting images. You can use the monitor when playing back images or operating MENU. This setting is a display setting for shooting with the viewfinder.

* These screen modes are available only in the setting for [Monitor].

Note

- If you tilt the product forward or backward by a large degree, the level error will be great.
- The product may have a margin of error of almost ±1° even when the inclination is corrected by the level.

Related Topic

- Using the DISP (Display Setting) button

5-021-326-12(1) Copyright 2020 Sony Corporation

Interchangeable Lens Digital Camera
ILCE-7SM3 α7SIII

Contents of this chapter

The following table of contents lists the features described in this chapter (“Viewing”). From each item name, you can jump to the page describing the respective functions.

Viewing images

- Selecting which memory card to play back (Select Playback Media)
- Playing back still images
- Enlarging an image being played back (Enlarge Image)
- Enlarge Initial Mag.
- Enlarge Initial Position
- Rotating recorded images automatically (Display Rotation)
- Playing back movies
- Volume Settings
- 4ch Audio Monitoring (movie)
- Playing back images using slideshow (Slide Show)
- Cont. Play for Interval
- Play Speed for Interval

Changing how images are displayed

- Playing back images on the image index screen (Image Index)
- Switching between still images and movies (View Mode)
- Display as Group
- Focus Frame Display (playback)

Setting how to jump between images

- Select Image Jump Dial
- Image Jump Method

Protecting images (Protect)

Adding information to images

- Rating
- Rating Set(Custom Key)
- Rotating an image (Rotate)

Extracting still images from a movie

- Photo Capture
- JPEG/HEIF Switch (Photo Capture)

Copying images from one memory card to another (Copy)

Deleting images

- Deleting multiple selected images (Delete)
- Delete confirm.

Viewing images on a TV

- Viewing images on a TV using an HDMI cable

5-021-326-12(1) Copyright 2020 Sony Corporation

Interchangeable Lens Digital Camera
ILCE-7SM3 α7SIII

Selecting which memory card to play back (Select Playback Media)

Selects a slot that contains a memory card.

1. **MENU → (Playback) → [Playback Target] → [Select Playback Media] → desired slot.**

Menu item details

Slot 1:
Selects the slot 1.

Slot 2:
Selects the slot 2.

Note

- When you select [Date View] in [View Mode], the camera only plays back images from a memory card selected using [Select Playback Media].

Related Topic

- Switching between still images and movies (View Mode)
- Rec. Media Settings (still image/movie): Prioritize Rec. Media

5-021-326-12(1) Copyright 2020 Sony Corporation

Interchangeable Lens Digital Camera
ILCE-7SM3 α7SIII

Playing back still images

Plays back the recorded images.

1. **Select MENU → [▶] (Playback) → [Playback Target] → [Select Playback Media] to choose which the memory card slot to play back.**
2. **Press the [▶] (Playback) button to switch to the playback mode.**
3. **Select the image with the control wheel.**
   - Images shot with continuous shooting or interval shooting are displayed as one group. To play back the images in the group, press the center of the control wheel.

Hint

- The product creates an image database file on a memory card to record and play back images. An image that is not registered in the image database file may not be played back correctly. To play back images shot using other devices, register those images to the image database file using MENU → (Shooting) → [Media] → [Recover Image DB].
- If you play back the images right after continuous shooting, the monitor may display an icon indicating that data is being written/the number of images left to write. During writing, some functions are not available.
- When [▶ Focus Frame Display] is set to [On], the focus frame at the time of shooting is displayed over played-back images. The focus frame that the camera used to focus during shooting is displayed in green. Even if multiple focus frames are displayed during shooting, only the one on which the camera actually tried to focus will be displayed during playback.

Related Topic

- Selecting which memory card to play back (Select Playback Media)
- Recover Image DB (still image/movie)
- Display as Group
- Focus Frame Display (playback)
- Enlarging an image being played back (Enlarge Image)

5-021-326-12(1) Copyright 2020 Sony Corporation

Enlarging an image being played back (Enlarge Image)

Enlarges the image being played back. Use this function to check the focus of the image, etc.

1. **Display the image you want to enlarge, and then press the (Enlarge Image) button.**
   - Turn the control wheel to adjust the zoom scale. By rotating the front/rear dial, you can switch to the previous or next image while keeping the same zoom scale.
   - The view will zoom in on the part of the image where the camera focused during shooting. If the focus location information cannot be obtained, the camera will zoom in on the center of the image.
2. **Select the portion you want to enlarge by pressing the top/bottom/right/left sides of the control wheel.**
3. **Press the MENU button or the center of the control wheel to exit the playback zoom.**

Hint

- You can also enlarge an image being played back using MENU.
- You can change the initial magnification and initial position of enlarged images by selecting MENU → (Playback) → [Magnification] → [Enlarge Initial Mag.] or [Enlarge Initial Position].
- You can also enlarge the image by touching the monitor. Drag the monitor to move the enlarged position. Set [Touch Operation] to [On] beforehand.

Note

- You cannot enlarge movies.

Related Topic

- Enlarge Initial Mag.
- Enlarge Initial Position
- Touch Operation
- Touch operations on the monitor

5-021-326-12(1) Copyright 2020 Sony Corporation

Interchangeable Lens Digital Camera
ILCE-7SM3 α7SIII

Enlarge Initial Mag.

Sets the initial magnification scale when playing back enlarged images.

1 **MENU → (Playback) → [Magnification] → [Enlarge Initial Mag.] → desired setting.**

Menu item details

Standard. Mag.:
Displays an image with the standard magnification.

Previous Mag.:
Displays an image with the previous magnification. The previous magnification is stored even after the enlarged display screen is closed.

Related Topic

- Enlarging an image being played back (Enlarge Image)
- Enlarge Initial Position

5-021-326-12(1) Copyright 2020 Sony Corporation

Interchangeable Lens Digital Camera
ILCE-7SM3 α7SIII

Enlarge Initial Position

Sets the initial position when enlarging an image in playback.

1 **MENU → (Playback) → [Magnification] → [Enlarge Initial Position] → desired setting.**

Menu item details

Focused Position:
Enlarges the image from the point of focus during shooting.
Center:
Enlarges the image from the center of the screen.

Related Topic

- Enlarging an image being played back (Enlarge Image)
- Enlarge Initial Mag.

5-021-326-12(1) Copyright 2020 Sony Corporation

Rotating recorded images automatically (Display Rotation)

Selects the orientation when playing back recorded images.

1 **MENU → (Playback) → [Playback Option] → [Display Rotation] → desired setting.**

Menu item details

Auto:
When you rotate the camera, the camera detects the vertical and horizontal directions, and displays the image being played back according to the orientation.

Manual:
Images shot vertically are displayed vertically. If you have set the image orientation using the [Rotate] function, the image will be displayed accordingly.

Off:
Images are always displayed horizontally.

Note

- Movies shot vertically are played back horizontally on the screen or the finder of the camera during movie playback.

Related Topic

- Rotating an image (Rotate)

5-021-326-12(1) Copyright 2020 Sony Corporation

Playing back movies

Plays back the recorded movies.

1. **Select the slot of the memory card to be played back from MENU → ▶ (Playback) → [Playback Target] → [Select Playback Media].**
2. **Press the ▶ (playback) button to switch to playback mode.**
3. **Select the movie to be played back using the control wheel and press the center of the control wheel to start playback.**

Available operations during movie playback

You can perform slow playback and sound volume adjustment, etc. by pressing the down side of the control wheel.

- : Playback
- : Pause
- : Fast-forward
- : Fast-rewind
- : Forward slow playback
- : Reverse slow playback
- : Next movie file
- : Previous movie file
- : Displays the next frame
- : Displays the previous frame
- : Photo Capture
- : Sound volume adjustment
- : Closes the operation panel

Hint

- “Forward slow playback,” “Reverse slow playback,” “Displays the next frame” and “Displays the previous frame” are available during pause.
- Movie files recorded using other products may not be able to be playable on this camera.

Note

- Even if you shoot the movie vertically, the movie will be displayed horizontally on the screen or the finder of the camera.

Related Topic

- Selecting which memory card to play back (Select Playback Media)
- Switching between still images and movies (View Mode)

5-021-326-12(1) Copyright 2020 Sony Corporation

Interchangeable Lens Digital Camera
ILCE-7SM3 α7SIII

Volume Settings

Sets the sound volume for movie playback.

1 **MENU → (Setup) → [Sound Option] → [Volume Settings] → desired setting.**

Adjusting the volume during playback

Press the bottom side of the control wheel while playing back movies to display the operation panel, then adjust the volume. You can adjust the volume while listening to the actual sound.

5-021-326-12(1) Copyright 2020 Sony Corporation

4ch Audio Monitoring (movie)

Sets the audio to be monitored by the device connected to the (headphone) terminal of the camera when you record movie audio in 4 channels or when playing back a movie recorded in 4 channels.

1. **MENU → (Setup) → [Sound Option] → [4ch Audio Monitoring] → desired setting.**

Menu item details

CH1/CH2:
Outputs audio from channel 1 to the L (left) side and from channel 2 to the R (right) side.

CH3/CH4:
Outputs audio from channel 3 to the L (left) side and from channel 4 to the R (right) side.

CH1+3/CH2+4:
Outputs the mixed audio of channel 1 and channel 3 to the L (left) side and the mixed audio of channel 2 and channel 4 to the R (right) side.

CH1/CH1:
Outputs audio from channel 1 to the L (left) side and R (right) side.

CH2/CH2:
Outputs audio from channel 2 to the L (left) side and R (right) side.

Note

- The [4ch Audio Monitoring] settings are enabled when an accessory for 4-channel audio recording is attached to the Multi Interface Shoe of the camera during movie recording.
- The camera cannot output audio in 4 channels to the device connected to the (headphone) terminal of the camera.
- When outputting audio through the speakers of the camera, the channels will also change depending on the [4ch Audio Monitoring] setting.

Related Topic

- Shoe Audio Set.

5-021-326-12(1) Copyright 2020 Sony Corporation

Playing back images using slideshow (Slide Show)

Automatically plays back images continuously.

1. **MENU → (Playback) → [Viewing] → [Slide Show] → desired setting.**
2. **Select [Enter].**

Menu item details

Repeat:
Select [On], in which images are played back in a continuous loop, or [Off], in which the product exits the slideshow when all the images are played back once.

Interval:
Select the display interval for images from among [1 Sec], [3 Sec], [5 Sec], [10 Sec] or [30 Sec].

To quit the slideshow in the middle of playback

Press the MENU button to quit the slideshow. You cannot pause the slideshow.

Hint

- During playback, you can display the next/previous image by pressing the right/left side of the control wheel.
- You can activate a slideshow only when [View Mode] is set to [Date View] or [Folder View(Still)].

5-021-326-12(1) Copyright 2020 Sony Corporation

Interchangeable Lens Digital Camera
ILCE-7SM3 α7SIII

Cont. Play for Interval

Continuously plays back images shot using interval shooting.

1. **MENU → (Playback) → [Viewing] → [Cont. Play for Interval].**
2. **Select the image group that you want to play back, and then press the center of the control wheel.**

Hint

- On the playback screen, you can start continuous playback by pressing the down button while displaying an image in the group.
- You can resume play or pause by pressing the down button during playback.
- You can change the playback speed by turning the front/rear dial or the control wheel during playback. You can also change the playback speed by selecting MENU → (Playback) → [Viewing] → [Play Speed for Interval].
- You can continuously play back images shot with continuous shooting as well.

Related Topic

- Interval Shoot Func.
- Play Speed for Interval

5-021-326-12(1) Copyright 2020 Sony Corporation

Interchangeable Lens Digital Camera
ILCE-7SM3 α7SIII

Play Speed for Interval

Sets the playback speed for still images during [Cont. Play for Interval].

1 **MENU → (Playback) → [Viewing] → [Play Speed for Interval] → desired setting.**

Hint

- You can also change the playback speed by turning the front/rear dial or the control wheel during [Cont. Play for Interval].

Related Topic

- Cont. Play for Interval

5-021-326-12(1) Copyright 2020 Sony Corporation

Interchangeable Lens Digital Camera
ILCE-7SM3 α7SIII

Playing back images on the image index screen (Image Index)

You can display multiple images at the same time in playback mode.

1. **Press the (Image Index) button while the image is being played back.**
2. **Select the image by pressing the top/bottom/right/left sides of the control wheel or turning the control wheel.**

To change the number of images to be displayed

MENU → (Playback) → [Playback Option] → [Image Index] → desired setting.

Menu item details

9 Images/25 Images

To return to single-image playback

Select the desired image and press the center of the control wheel.

To display a desired image quickly

Select the bar on the left of the image index screen using the control wheel, then press the top/bottom sides of the control wheel. While the bar is being selected, you can display the calendar screen or folder selection screen by pressing the center. In addition, you can switch View Mode by selecting an icon.

Related Topic

- Switching between still images and movies (View Mode)

5-021-326-12(1) Copyright 2020 Sony Corporation

Switching between still images and movies (View Mode)

Sets the View Mode (image display method).

1 **MENU → (Playback) → [Playback Target] → [View Mode] → desired setting.**

Menu item details

Date View:
Displays the images by date.
Folder View(Still):
Displays only still images.
Movie View:
Displays only movies by date.

5-021-326-12(1) Copyright 2020 Sony Corporation

Interchangeable Lens Digital Camera
ILCE-7SM3 α7SIII

Display as Group

Sets whether or not to display continuously shot images or images shot using interval shooting as a group.

1 **MENU → (Playback) → [Playback Option] → [Display as Group] → desired setting.**

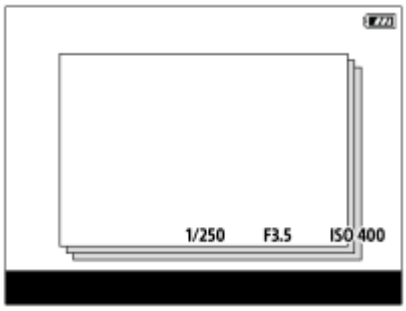

Menu item details

On:
Displays images as a group.
To play back the images in a group, select the group and press the center of the control wheel.
Off:
Does not display images as a group.

Hint

- The following images are grouped.
  - Images shot with [Drive Mode] set to [Cont. Shooting] (One sequence of images shot continuously by holding down the shutter button during continuous shooting becomes one group.)
  - Images shot with [Interval Shoot Func.] (Images shot during one session of interval shooting become one group.)
- On the image index screen, (Display as Group) icon is displayed over the group.

Note

- Images can be grouped and displayed only when [View Mode] is set to [Date View]. When it is not set to [Date View], images cannot be grouped and displayed, even if [Display as Group] is set to [On].
- If you delete the group, all the images in the group will be deleted.

Related Topic

- Cont. Shooting
- Interval Shoot Func.

5-021-326-12(1) Copyright 2020 Sony Corporation

Focus Frame Display (playback)

Sets whether or not to display a focus frame around the area where the camera focused when you play back a still image.

1 **MENU → [▶] (Playback) → [Playback Option] → [▶ Focus Frame Display] → desired setting.**

Menu item details

Off:
Does not display a focus frame during playback.
On:
Displays a focus frame in green during playback.

Hint

- Even if multiple focus frames are displayed at the time of shooting, only the one indicating where the camera actually focused will be displayed during playback.
- Even if a focus frame is displayed around the face of the subject at the time of shooting, the focus frame will be displayed around the eye during playback when an eye is detected.

Note

- A focus frame will not be displayed over the following images.
  - Still images shot with manual focus
  - Movies
  - Still images created with [Photo Capture]
- The focus frame is displayed only on the single-image playback screen. The focus frame is not displayed on the image index screen or over enlarged images.
- The focus frame is not displayed during auto reviewing.
- If you shoot an image with a different composition after performing auto-focusing, the focus frame will appear offset from the subject.
- Even if the focus frame is displayed, it may not be in focus to the subject.
- Even if you turn off the focusing frame display while shooting using the [AF Area Auto Clear] or [AF-C Area Display] function, when [▶ Focus Frame Display] is set to [On], the focusing frame will be displayed during playback.

5-021-326-12(1) Copyright 2020 Sony Corporation

Interchangeable Lens Digital Camera
ILCE-7SM3 α7SIII

Select Image Jump Dial

You can jump between images during playback. This function is useful when you want to find one of many recorded images. You can also quickly find protected images or images set with a particular rating. Assign this function to either the front dial or rear dial.

1 **MENU → (Playback) → [Playback Option] → [Select Image Jump Dial] → desired item.**

Menu item details

Front dial:
Use the front dial to jump between images.
Rear dial:
Use the rear dial to jump between images.

Related Topic

- Image Jump Method

5-021-326-12(1) Copyright 2020 Sony Corporation

Interchangeable Lens Digital Camera
ILCE-7SM3 α7SIII

Image Jump Method

Sets the method for jumping between images during playback by operating a dial.

1 **MENU → (Playback) → [Playback Option] → [Image Jump Method] → desired setting item.**

Menu item details

One by one:
Plays back images one by one.
By 10 images:
Jumps in units of 10 images.
By 100 images:
Jumps in units of 100 images.
Protect Only:
Plays back only protected images.
Rating Only:
Plays back all rated images.
Rating Only (★) - Rating Only (★★★★★):
Plays back only images for which a rating (★ to ★★★★★) has been specified.
W/O Rating Only:
Plays back only images that are not rated.

Note

- When [Image Jump Method] is set to [One by one], [By 10 images], or [By 100 images], one group is counted as one image.
- When [Image Jump Method] is set to a parameter other than [One by one], [By 10 images], or [By 100 images], you can jump between images only when [View Mode] is set to [Date View]. When [View Mode] is set to a parameter other than [Date View], images will be played back one by one even if you use the dial assigned using [Select Image Jump Dial].
- When [Image Jump Method] is set to a parameter other than [One by one], [By 10 images], or [By 100 images], movies are always skipped during jumping playback.

Related Topic

- Rating
- Protecting images (Protect)
- Select Image Jump Dial

5-021-326-12(1) Copyright 2020 Sony Corporation

Interchangeable Lens Digital Camera
ILCE-7SM3 α7SIII

Protecting images (Protect)

Protects recorded images against accidental erasure. The (protect) mark is displayed on protected images.

1 **MENU → (Playback) → [Selection/Memo] → [Protect] → desired setting.**

Menu item details

Multiple Img.:
Applies the protection of the selected multiple images.
(1) Select the image to be protected, then press the center of the control wheel. The (check) mark is displayed in the check box. To cancel the selection, press the center again to remove the (check) mark.
(2) To protect other images, repeat step (1).
(3) MENU → [OK].

All in this Folder:
Protects all images in the selected folder.

Cancel All in this Folder:
Cancels the protection of all images in the selected folder.

All with this date:
Protects all images taken on the selected date.

Cancel All with this date:
Cancels the protection of all images taken on the selected date.

All Images in This Group:
Protects all the images in the selected group.

Cancel All in This Group:
Cancels the protection of all the images in the selected group.

Hint

- If you assign [Protect] to the key of your choice using MENU → (Setup) → [Operation Customize] → [Custom Key Setting], you can protect images or cancel protection by simply pressing the key. The [Protect] function is assigned to the C3 button in the default settings.
- If you select a group in [Multiple Img.], all the images in the group will be protected. To select and protect particular images within the group, execute [Multiple Img.] while displaying the images within the group.

Note

- The menu items that can be selected vary according to the [View Mode] setting and the selected content.

5-021-326-12(1) Copyright 2020 Sony Corporation

Rating

You can assign ratings to recorded images on a scale of the number of stars (★ - ★★★★★) to make it easier to find images.

1. **MENU → ▶ (Playback) → [Selection/Memo] → [Rating].**

   The image rating selection screen will appear.

2. **Press the left/right sides of the control wheel to display an image to which you want to assign a rating, and then press the center.**

3. **Select the level of ★ (Rating) by pressing the left/right side of the control wheel, and then press the center.**

4. **Press the MENU button to exit the rating setting screen.**

Hint

- You can also assign ratings when playing back images by using the custom key. Assign [Rating] to the desired key using [▶ Custom Key Setting] beforehand, and then press the custom key while playing back an image to which you want to assign a rating. The level of ★ (Rating) changes each time you press the custom key.
- By specifying ratings with the [Image Jump Method] function, you can quickly find the desired image.

Related Topic

- Assigning frequently used functions to buttons (Custom Key Setting)
- Rating Set(Custom Key)
- Image Jump Method

5-021-326-12(1) Copyright 2020 Sony Corporation

Interchangeable Lens Digital Camera
ILCE-7SM3 α7SIII

Rating Set(Custom Key)

Sets the available number of ★ (rating) when rating (ranking) images with the key to which you have assigned [Rating] using [▶ Custom Key Setting].

1. **MENU → ▶ (Playback) → [Selection/Memo] → [Rating Set(Custom Key)].**

2. **Add a ✓ (check) mark to the number of ★ (rating) that you want to activate.**

   You can select the checked number when setting [Rating] using the custom key.

Related Topic

- Rating
- Assigning frequently used functions to buttons (Custom Key Setting)

5-021-326-12(1) Copyright 2020 Sony Corporation

Rotating an image (Rotate)

Rotates a recorded image counter-clockwise.

1. **Display the image to be rotated, then select MENU → ▶ (Playback) → [Edit] → [Rotate].**

2. **Press the center of the control wheel.**

   The image is rotated counter-clockwise. The image rotates as you press the center.
   If you rotate the image once, the image remains rotated even after the product is turned off.

Note

- Even if you rotate a movie file, it will be played back horizontally on the monitor or viewfinder of the camera.
- You may not be able to rotate images shot using other products.
- When viewing rotated images on a computer, the images may be displayed in their original orientation depending on the software.

5-021-326-12(1) Copyright 2020 Sony Corporation

Interchangeable Lens Digital Camera
ILCE-7SM3 α7SIII

Photo Capture

Captures a chosen scene in a movie to save as a still image. First shoot a movie, then pause the movie during playback to capture decisive moments that tend to be missed when shooting still images, and save them as still images.

1. **Display the movie that you want to capture as a still image.**
2. **MENU → (Playback) → [Edit] → [Photo Capture].**
3. **Play back the movie and pause it.**
4. **Find the desired scene using forward slow playback, reverse slow playback, displays the next frame, and displays the previous frame, and then stop the movie.**
5. **Press (Photo Capture) to capture the chosen scene.**

   The scene is saved as a still image.

Hint

- With [JPEG/HEIF Switch], you can select either JPEG or HEIF as the recording file format for still images.

Related Topic

- Shooting movies
- Playing back movies
- JPEG/HEIF Switch (Photo Capture)

5-021-326-12(1) Copyright 2020 Sony Corporation

Interchangeable Lens Digital Camera
ILCE-7SM3 α7SIII

JPEG/HEIF Switch (Photo Capture)

Switches the file format (JPEG / HEIF) for still images captured with [Photo Capture].
You can view and edit JPEG files in various environments. The HEIF format has high compression efficiency. The camera can record with high image quality and small file sizes in the HEIF format. Depending on the computer or software, you may not be able to view or edit HEIF files. In addition, a HEIF-compatible environment is required to play back still images in the HEIF format. You can enjoy high-quality still images by connecting the camera and the TV via HDMI.

1 **MENU → (Playback) → [Edit] → [JPEG/HEIF Switch] → desired setting.**

Menu item details

JPEG:
Performs digital processing on the RAW file and records it in the JPEG format. This setting gives priority to compatibility.

HEIF(4:2:0):
Performs digital processing on the RAW file and records it in the HEIF (4:2:0) format. This setting gives priority to image quality and compression efficiency.

HEIF(4:2:2):
Performs digital processing on the RAW file and records it in the HEIF (4:2:2) format. This setting gives priority to image quality.

Note

- HEIF image files recorded with this camera cannot be displayed on other cameras that do not support the HEIF file format. Be careful not to accidentally erase HEIF image files by formatting the memory card or deleting the files.

Related Topic

- Photo Capture

5-021-326-12(1) Copyright 2020 Sony Corporation

Copying images from one memory card to another (Copy)

You can copy images from a memory card in a slot that is selected using [Select Playback Media] to a memory card in another slot.

1. **MENU → ▶ (Playback) → [Edit] → [Copy].**

   All of the contents with a date or in a folder currently being played back will be copied to a memory card in another slot.

Hint

- You can select the type of images to be displayed by selecting MENU → ▶ (Playback) → [Playback Target] → [View Mode].

Note

- If images in a group are copied, the copied images will not be displayed as a group on the destination memory card.
- If protected images are copied, the protection will be canceled on the destination memory card.
- It may take a long time when many images are to be copied. Use a sufficiently charged battery pack.
- To copy a movie, the destination memory card must support the recording format of the movie. If the movie cannot be copied, a message will be displayed on the monitor of the camera.

Related Topic

- Selecting which memory card to play back (Select Playback Media)
- Switching between still images and movies (View Mode)

5-021-326-12(1) Copyright 2020 Sony Corporation

Deleting multiple selected images (Delete)

You can delete multiple selected images. Once you have deleted an image, you cannot restore it. Confirm the image to be deleted beforehand.

1 **MENU → ▶ (Playback) → [Delete] → [Delete] → desired setting.**

Menu item details

All Other Than This Img.:
Deletes all images in the group except the selection.

All Images in This Group:
Deletes all images in the selected group.

Multiple Img.:
Deletes the selected images.

(1) Select the images to be deleted, then press the center of the control wheel. The ✓ (check) mark is displayed in the check box. To cancel the selection, press the center again to remove the ✓ (check) mark.

(2) To delete other images, repeat step (1).

(3) MENU → [OK].

All in this Folder:
Deletes all images in the selected folder.

All with this date:
Deletes all images taken on the selected date.

Hint

- Perform [Format] to delete all images, including protected images.
- To display the desired folder or date, select the desired folder or date during playback by performing the following procedure: (Image Index) button → select the bar on the left using the control wheel → select the desired folder or date using the top/bottom sides of the control wheel.
- If you select a group in [Multiple Img.], all the images in the group will be deleted. To select and delete particular images within the group, execute [Multiple Img.] while displaying the images within the group.

Note

- The protected images cannot be deleted.
- The menu items that can be selected vary according to the [View Mode] setting and the selected content.

Related Topic

- Display as Group
- Using the Delete button
- Format

5-021-326-12(1) Copyright 2020 Sony Corporation

Interchangeable Lens Digital Camera
ILCE-7SM3 α7SIII

Delete confirm.

You can set whether [Delete] or [Cancel] is selected as a default on the delete confirmation screen.

1 **MENU → (Playback) → [Delete] → [Delete confirm.] → desired setting.**

Menu item details

"Delete" first:
[Delete] is selected as the default setting.
"Cancel" first:
[Cancel] is selected as the default setting.

5-021-326-12(1) Copyright 2020 Sony Corporation

Interchangeable Lens Digital Camera
ILCE-7SM3 α7SIII

Viewing images on a TV using an HDMI cable

To view images stored on this product using a TV, an HDMI cable (sold separately) and a TV equipped with an HDMI jack are required. For details, refer to the operating instructions supplied with the compatible TV.

1. **Turn off both this product and the TV.**

2. **Connect the HDMI terminal of this product to the HDMI jack of the TV using an HDMI cable (sold separately).**

   Use an HDMI cable that is compatible with the HDMI Type-A terminal of the product and the HDMI jack of the TV.

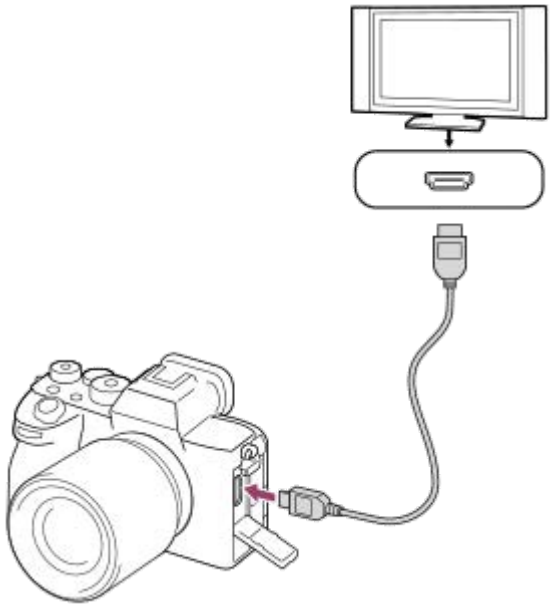

3. **Turn on the TV and switch the input.**

4. **Turn on this product.**

   Images shot with the product appear on the TV screen.

5. **Select an image using the right/left sides of the control wheel.**

   - The monitor of this camera is not lit up on the playback screen.
   - If the playback screen is not displayed, press the [▶] (Playback) button.

“BRAVIA” Sync

By connecting this product to a TV that supports “BRAVIA” Sync using an HDMI cable (sold separately), you can operate this product's playback functions with the TV remote control.

1. After performing the steps above to connect this camera to a TV, select MENU → (Setup) → [External Output] → [CTRL FOR HDMI] → [On].
2. Press the SYNC MENU button on the TV remote control, and select the desired mode.

- If you connect this camera to a TV using an HDMI cable, available menu items are limited.
- Only TVs that support “BRAVIA” Sync can provide SYNC MENU operations. For details, refer to the operating instructions supplied with the TV.
- If the product performs unwanted operations in response to the TV remote control when the product is connected to another manufacturer’s TV using an HDMI connection, select MENU → (Setup) → [External Output] → [CTRL FOR HDMI] → [Off].

Hint

- This product is compatible with the PhotoTV HD standard. When you connect a Sony PhotoTV HD-compatible device using an HDMI cable (sold separately) or the USB cable, the TV becomes set to an image quality suitable for viewing still images, and a whole new world of photos can be enjoyed in breathtakingly high quality.
- The PhotoTV HD allows for a highly-detailed, photo-like expression of subtle textures and colors.

Note

- Do not connect this product and another device using the output terminals of both. Doing so may cause a malfunction.
- Some devices may not work properly when connected to this product. For example, they may not output video or audio.
- Use an HDMI cable with the HDMI logo or a genuine Sony cable.
- When [Time Code Output] is set to [On], the image may not be output properly to the TV or recording device. In such cases, set [Time Code Output] to [Off].
- If images do not appear on the TV screen properly, select MENU → (Setup) → [External Output] → [HDMI Resolution] → [2160p], [1080p] or [1080i] according to the TV to be connected.
- During HDMI output, when you switch the movie from 4K to HD image quality or vice-versa, or change the movie to a different frame rate or different color mode, the screen may become dark. This is not a malfunction.

5-021-326-12(1) Copyright 2020 Sony Corporation

Interchangeable Lens Digital Camera
ILCE-7SM3 α7SIII

Format

When you use a memory card with this camera for the first time, we recommend that you format the card using the camera for stable performance of the memory card. Note that formatting permanently erases all data on the memory card, and is unrecoverable. Save valuable data on a computer, etc.

1. **MENU → (Shooting) → [Media] → [Format] → desired memory card slot.**

Note

- Formatting permanently erases all data including protected images and registered settings (from M1 to M4).
- The access lamp lights up during formatting. Do not remove the memory card while the access lamp is lit up.
- Format the memory card on this camera. If you format the memory card on the computer, the memory card may not be usable depending on the format type.
- It may take a few minutes to complete formatting, depending on the memory card.
- You cannot format the memory card if the remaining battery charge is less than 1%.

Related Topic

- Memory cards that can be used
- Notes on memory card

5-021-326-12(1) Copyright 2020 Sony Corporation

Interchangeable Lens Digital Camera
ILCE-7SM3 α7SIII

Rec. Media Settings (still image/movie): Prioritize Rec. Media

Selects the memory card slot on which to record. [Slot 1] is the default setting. If you do not intend to change the settings and will only use one memory card, use the slot 1.

1 **MENU → (Shooting) → [Media] → [Rec. Media Settings] → [Prioritize Rec. Media] → desired slot.**

Menu item details

Slot 1:
Selects media in the slot 1.

Slot 2:
Selects media in the slot 2.

Hint

- To record the same image on two memory cards at the same time or to sort recorded images onto two memory card slots by the image type (still image/movie), use [Recording Mode].

Related Topic

- Rec. Media Settings (still image/movie): Recording Mode
- Rec. Media Settings (still image/movie): Auto Switch Media
- Selecting which memory card to play back (Select Playback Media)

5-021-326-12(1) Copyright 2020 Sony Corporation

Interchangeable Lens Digital Camera
ILCE-7SM3 α7SIII

Rec. Media Settings (still image/movie): Recording Mode

You can select the method for recording an image, such as recording the same image simultaneously to two memory cards or recording different types of images to two memory cards.

1 **MENU → (Shooting) → [Media] → [Rec. Media Settings] → [Recording Mode] → desired setting.**

List of storage locations by recording mode

Recording Mode	Memory card slot selected in [Prioritize Rec. Media]	Another memory card slot
Standard	still image/movie	—
Simult. ( )	still image/movie	still image
Simult. ( )	still image/movie	movie
Simult. (/)	still image/movie	still image/movie
Sort(RAW/JPEG)	still image (RAW)/movie	still image (JPEG)
Sort (RAW/HEIF)	still image (RAW)/movie	still image (HEIF)
Sort(JPEG/RAW)	still image (JPEG)/movie	still image (RAW)
Sort (HEIF/RAW)	still image (HEIF)/movie	still image (RAW)
Sort(/)	still image	movie

Related Topic

- Memory cards that can be used
- Rec. Media Settings (still image/movie): Prioritize Rec. Media
- Rec. Media Settings (still image/movie): Auto Switch Media

5-021-326-12(1) Copyright 2020 Sony Corporation

Interchangeable Lens Digital Camera
ILCE-7SM3 α7SIII

Rec. Media Settings (still image/movie): Auto Switch Media

If a memory card in use becomes full or you have forgotten to insert a memory card into a slot, you can record images to the other memory card.

1 **MENU → (Shooting) → [Media] → [Rec. Media Settings] → [Auto Switch Media] → desired setting.**

Menu item details

On:
The camera automatically starts recording on the other memory card when a memory card in use becomes full or if you have forgotten to insert a memory card.

Off:
The camera does not perform [Auto Switch Media].

How the camera switches the memory card slot in use

When [Recording Mode] is set to [Standard]:
When images cannot be recorded to the memory card in use, [Prioritize Rec. Media] switches automatically and images are recorded to the other memory card.
When the other memory card becomes full after switching, the camera starts recording in the former slot again.

Example: When [Prioritize Rec. Media] is set to [Slot 1]

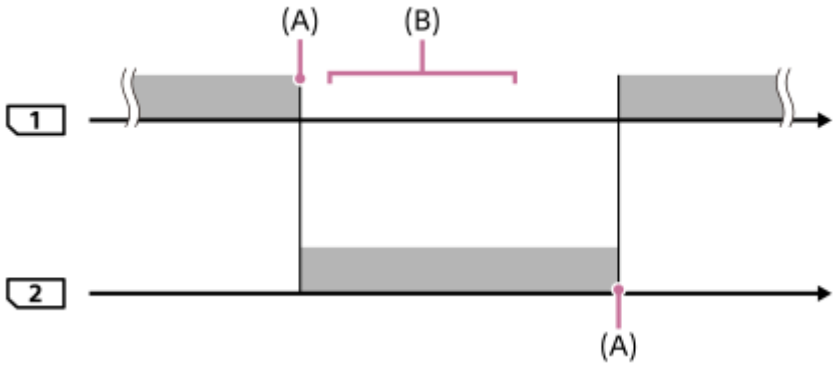

: Recording images
(A): Recording is no longer possible on the memory card (due to lack of capacity, etc.).
(B): The memory card is replaced with a recordable one.

When recording the same image simultaneously to two memory cards:

- Recording still images with [Recording Mode] set to [Simult. ( )]
- Recording movies with [Recording Mode] set to [Simult. ( )]
- Recording still images or movies with [Recording Mode] set to [Simult. (/)]

The camera stops simultaneous recording when either of the memory cards becomes full. When you remove the memory card that has become full, the camera starts recording to the other memory card.
When you replace the memory card that has become full with a recordable memory card, the camera starts simultaneous recording with the selected setting again.

Example: When [Prioritize Rec. Media] is set to [Slot 1]
([Recording Mode]: [Simult. (/)])

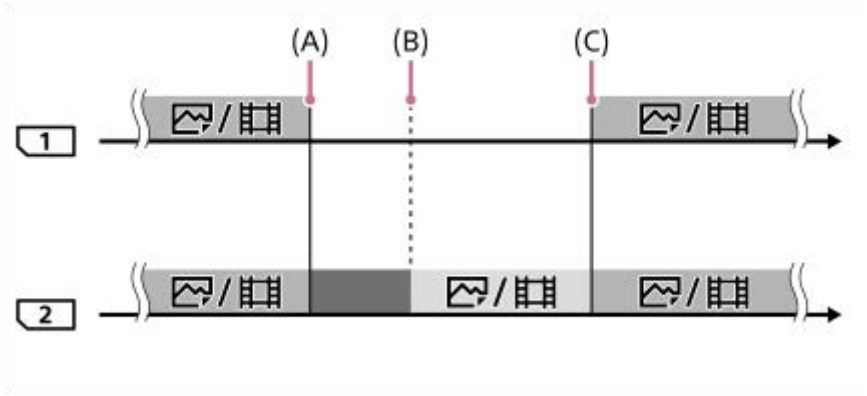

: Simultaneous recording is available.
: Recording is disabled.
: The same image cannot be recorded simultaneously.
(A): Recording is no longer possible on the memory card (due to lack of capacity, etc.).
(B): The memory card is removed.
(C): A recordable memory card is inserted.

- Images that are not recorded simultaneously (for example: still images during [Simult. ( )]) continue to be recorded to the other memory card when the memory card in use becomes full.
- When the memory card in use becomes full while recording a movie, the movie continues to be recorded to the other memory card until the recording in progress is finished.

When recording images separately to two memory cards in the RAW and JPEG/HEIF formats:

- When [File Format] is set to [RAW & JPEG]/[RAW & HEIF], and [Recording Mode] is set to the following:
  - [Sort(RAW/JPEG)]
  - [Sort (RAW/HEIF)]
  - [Sort(JPEG/RAW)]
  - [Sort (HEIF/RAW)]

The camera stops recording when either of the memory cards becomes full. When you remove the memory card that has become full, the camera starts recording both in the RAW and JPEG/HEIF formats to the other memory card. When you replace the memory card that has become full with a recordable memory card, the camera starts recording the two types of images separately with the selected setting again.

Example: When [Prioritize Rec. Media] is set to [Slot 1]
([Recording Mode]: [Sort(RAW/JPEG)])

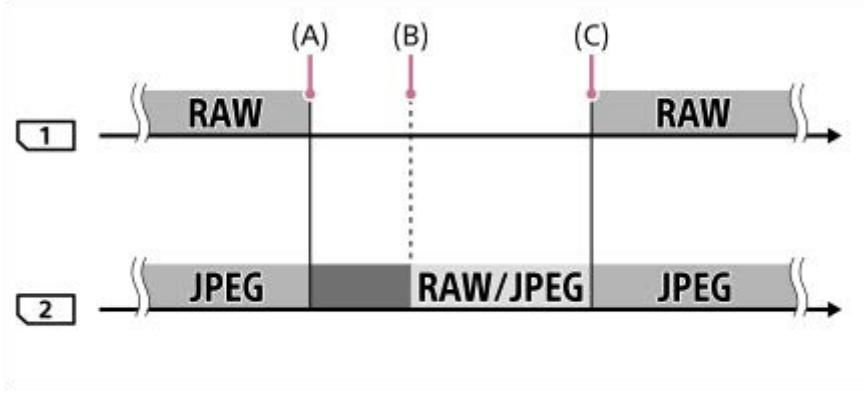

: Images are sorted by the file format.
: Recording still images is disabled (movies can be recorded).

: Images cannot be sorted.
(A): Recording is no longer possible on the memory card (due to lack of capacity, etc.).
(B): The memory card is removed.
(C): A recordable memory card is inserted.

- When the memory card in use becomes full while recording movies, the camera starts recording to the other memory card.

When recording still images and movies separately to two memory cards:

- When [Recording Mode] is set to [Sort(/)]

When either of the memory cards becomes full, both still images and movies are recorded to the other memory card. When you replace the memory card that has become full with a recordable memory card, the camera starts recording the two types of images separately with the selected setting again.

Example: When [Prioritize Rec. Media] is set to [Slot 1]
([Recording Mode]: [Sort(/)])

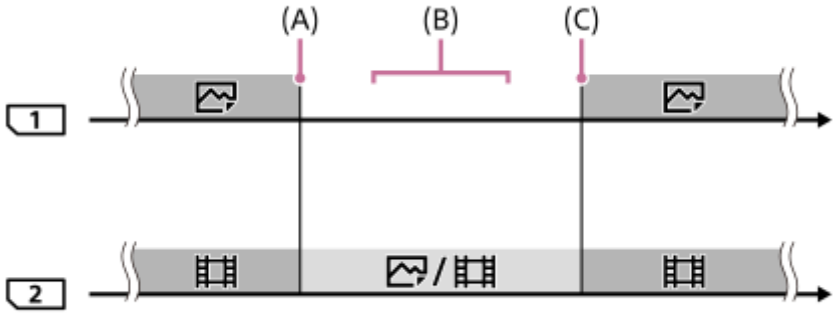

: Images are sorted by the image type.
: Images cannot be sorted.
(A): Recording is no longer possible on the memory card (due to lack of capacity, etc.).
(B): The memory card is removed.
(C): A recordable memory card is inserted.

Hint

- Images are recorded to the memory card in the slot displayed on the monitor with an arrow symbol. After the camera switches the slot using [Auto Switch Media], replace the memory card in the former slot with a recordable memory card.
- If [Recording Mode] is set to [Standard], the setting for [Prioritize Rec. Media] will switch automatically when the slot switches. If you want to record on the slot in use before switching, select the desired slot again using [Prioritize Rec. Media].
- If you want to continually record with the settings selected with [Recording Mode] and [Prioritize Rec. Media], set [Auto Switch Media] to [Off].

Related Topic

- Memory cards that can be used
- Recordable movie times
- Rec. Media Settings (still image/movie): Prioritize Rec. Media
- Rec. Media Settings (still image/movie): Recording Mode

5-021-326-12(1) Copyright 2020 Sony Corporation

Interchangeable Lens Digital Camera
ILCE-7SM3 α7SIII

Select REC Folder

If [Folder Name] under [File/Folder Settings] is set to [Standard Form] and there are 2 folders or more, you can select the folder on the memory card to which images are to be recorded.

1 **MENU → (Shooting) → [File] → [Select REC Folder] → desired folder.**

Note

- You cannot select the folder when [Folder Name] under [File/Folder Settings] is set to [Date Form].
- If [Recording Mode] under [Rec. Media Settings] is set to other than [Standard], you may only select the common folder on the both memory cards. If there is no common folder, you can make one using [Create New Folder].

Related Topic

- File/Folder Settings
- Create New Folder

5-021-326-12(1) Copyright 2020 Sony Corporation

Create New Folder

Creates a new folder on the memory card for recording still images. A new folder is created with a folder number one greater than the largest folder number currently used. Images are recorded in the newly created folder.
Up to 4,000 images in total can be stored in one folder. When the folder capacity is exceeded, a new folder may be automatically created.

1. **MENU → (Shooting) → [File] → [Create New Folder].**

Note

- When you insert a memory card that was used with other equipment into this product and shoot images, a new folder may be automatically created.
- If [Recording Mode] under [Rec. Media Settings] is set to other than [Standard], a new folder is created with a folder number one greater than the largest folder number currently used on both memory cards inserted in the memory card slots.
- If [Recording Mode] under [Rec. Media Settings] is set to other than [Standard] and an image is shot, a new folder may be automatically created.

Related Topic

- File/Folder Settings

5-021-326-12(1) Copyright 2020 Sony Corporation

Interchangeable Lens Digital Camera
ILCE-7SM3 α7SIII

Recover Image DB (still image/movie)

If image files were processed on a computer, problems may occur in the image database file. In such cases, the images on the memory card will not be played back on this product. If these problems happen, repair the file using [Recover Image DB].
Images recorded on the memory card are not deleted by [Recover Image DB].

1. **MENU → (Shooting) → [Media] → [Recover Image DB] → desired memory card slot → [Enter].**

Note

- If the battery pack is extremely depleted, image database files cannot be repaired. Use a sufficiently charged battery pack.

5-021-326-12(1) Copyright 2020 Sony Corporation

Interchangeable Lens Digital Camera
ILCE-7SM3 α7SIII

Display Media Info. (still image/movie)

Displays the recordable number of still images and the remaining recording time for movies on the memory card.

1 **MENU → (Shooting) → [Media] → [Display Media Info.] → desired memory card slot.**

5-021-326-12(1) Copyright 2020 Sony Corporation

File/Folder Settings

Configure settings related to the folder and file name of the still image to be shot.

1 **MENU → (Shooting) → [File] → [File/Folder Settings] → desired setting.**

Menu item details

File Number:
You can set how to assign file numbers to still images.
[Series]: Does not reset file numbers for each folder.
[Reset]: Resets file numbers for each folder.

Set File Name:
You can specify the first three characters of the file name.

Folder Name:
You can set how folder names are assigned.
[Standard Form]: Folders are named as “folder number + MSDCF”.
Example: 100MSDCF
[Date Form]: Folders are named as “folder number + Y (the last digit of the year)/MM/DD”.
Example: 10000405 (Folder number: 100; date: 04/05/2020)

Hint

- The settings for [File Number] and [Set File Name] are applied to both Slot 1 and Slot 2.
- When [File Number] is set to [Series], file numbers will be assigned sequentially across the memory cards in the slots even if you change the [Prioritize Rec. Media] setting.

Note

- Only capital letters, numbers, and underscores can be used for [Set File Name]. Underscores cannot be used for the first character.
- The three characters specified using [Set File Name] are only applied to files recorded after the setting is made.

Related Topic

- Create New Folder
- File Settings

5-021-326-12(1) Copyright 2020 Sony Corporation

Interchangeable Lens Digital Camera
ILCE-7SM3 α7SIII

File Settings

Configure settings for the file names of recorded movies.

1 **MENU → (Shooting) → [File] → [File Settings] → desired setting.**

Menu item details

File Number:
You can set how to assign file numbers to movies.
[Series]: Does not reset file numbers even if the memory card is changed.
[Reset]: Resets the file number when the memory card is changed.

Series Counter Reset:
Resets the series counter used when [File Number] is set to [Series].

File Name Format:
You can set the format for movie file names.
[Standard]: The file name of the recorded movie starts with “C.” Example: C0001
[Title]: The file name of the recorded movie becomes “Title+File number.”
[Date + Title]: The file name of the recorded movie becomes “Date+Title+File number.”
[Title + Date]: The file name of the recorded movie becomes “Title+Date+ File number.”

Title Name Settings:
You can set the title when [File Name Format] is set to [Title], [Date + Title], or [Title + Date].

Hint

- The settings for [File Number] and [File Name Format] are applied to both Slot 1 and Slot 2.
- When [File Number] is set to [Series], file numbers will be assigned sequentially across the memory cards in the slots even if you change the [Prioritize Rec. Media] setting.

Note

- Only alphanumeric characters and symbols can be input for [Title Name Settings]. Up to 37 characters can be entered.
- Titles specified using [Title Name Settings] are only applied to movies recorded after the setting is made.
- You cannot set how folder names are assigned for movies.
- If you are using an SDHC memory card, [File Name Format] is locked to [Standard].
- If there are unused numbers due to file deletion, etc., these numbers will be reused when the movie file number reaches “9999.”

Related Topic

- File/Folder Settings

5-021-326-12(1) Copyright 2020 Sony Corporation

Interchangeable Lens Digital Camera
ILCE-7SM3 α7SIII

IPTC Information

You can write IPTC information* when recording still images. Create and edit IPTC information using the IPTC Metadata Preset (https://www.sony.net/iptc/help/) and write the information to a memory card beforehand.

* IPTC information consists of digital image metadata attributes, as standardized by the International Press Telecommunications Council.

1 **MENU → (Shooting) → [File] → [IPTC Information] → desired setting item.**

Menu item details

Write IPTC Info:
Sets whether to write IPTC information to still images. ([On]/[Off])

- If you select [On], the IPTC (IPTC) icon will appear on the shooting screen.

Register IPTC Info :
Registers IPTC information from a memory card to the camera. Select [Slot 1] or [Slot 2] as the memory card from which to read out IPTC information.

Hint

- When you play back images that have IPTC information, the IPTC (IPTC) icon appears on the screen.
- For details on how to use the IPTC Metadata Preset, refer to the following support page.
  https://www.sony.net/iptc/help/

Note

- Whenever you register IPTC information, information previously registered to the camera is overwritten.
- You cannot edit or check IPTC information on the camera.
- To delete IPTC information registered to the camera, reset the camera to the initial settings.
- Before lending out or handing over the camera, reset the camera to delete IPTC information.

Related Topic

- Setting Reset

5-021-326-12(1) Copyright 2020 Sony Corporation

Interchangeable Lens Digital Camera
ILCE-7SM3 α7SIII

Copyright Info

Writes copyright information onto the still images.

1. **MENU → (Shooting) → [File] → [Copyright Info] → desired setting.**

2. **When you select [Set Photographer] or [Set Copyright], a keyboard appears on the screen. Enter your desired name.**

   You can only enter alphanumeric characters and symbols for [Set Photographer] and [Set Copyright]. You can enter up to 46 letters.

Menu item details

Write Copyright Info:
Sets whether to write copyright information. ([On]/[Off])

- If you select [On], a © (Copyright) icon will appear on the shooting screen.

Set Photographer:
Sets the photographer name.

Set Copyright:
Sets the copyright holder name.

Disp. Copyright Info:
Displays the current copyright information.

Note

- A © (Copyright) icon appears during the playback of images with copyright information.
- In order to prevent unauthorized use of [Copyright Info], be sure to clear the [Set Photographer] and [Set Copyright] columns before lending out or handing over your camera.
- Sony is not liable for problems or damages resulting from use of [Copyright Info].

Related Topic

- Using the keyboard

5-021-326-12(1) Copyright 2020 Sony Corporation

Write Serial Number

Writes the camera’s serial number to the Exif data when shooting still images.

1 **MENU → (Shooting) → [File] → [Write Serial Number] → desired setting.**

Menu item details

On:
Writes the camera’s serial number to the Exif data for the image.
Off:
Does not write the camera’s serial number to the Exif data for the image.

5-021-326-12(1) Copyright 2020 Sony Corporation

Interchangeable Lens Digital Camera
ILCE-7SM3 α7SIII

Ctrl w/ Smartphone

Sets the condition for connecting the camera to a smartphone.

1 **MENU → (Network) → [Transfer/Remote] → [Ctrl w/ Smartphone] → desired setting.**

Menu item details

Ctrl w/ Smartphone:
Sets whether to connect the camera and a smartphone using Wi-Fi. ([On]/[Off])

Connection:
Displays the QR code or SSID used to connect the camera to a smartphone.

Always Connected:
Selects the connection method between the camera and a smartphone. ([On]/[Off])
If this item is set to [On], once you connect the camera to a smartphone, you do not need to perform the connection procedure on the camera subsequent times. If it is set to [Off], the camera will connect to a smartphone only when the connection procedure is performed.

Note

- If [Always Connected] is set to [On], the power consumption will be greater than when it is set to [Off].

Related Topic

- One-touch connection with NFC
- Connecting the camera and a smartphone using the QR Code
- Connecting the camera and a smartphone using the SSID and password
- Send to Smartphone

5-021-326-12(1) Copyright 2020 Sony Corporation

Interchangeable Lens Digital Camera
ILCE-7SM3 α7SIII

Bluetooth Rmt Ctrl

You can operate the camera using a Bluetooth remote commander (sold separately). For details on compatible remote commander, visit the Sony web site in your area, or consult your Sony dealer or local authorized Sony service facility. Select MENU → (Network) → [Bluetooth] → [Bluetooth Function] → [On] in advance. Refer to the instruction manual for the Bluetooth remote commander as well.

1. **On the camera, select MENU → (Network) → [Transfer/Remote] → [Bluetooth Rmt Ctrl] → [On].**
   - If there is no Bluetooth device currently paired with the camera, the screen for pairing as described in Step 2 will appear.
2. **On the camera, select MENU → (Network) → [Bluetooth] → [Pairing] to display the screen for pairing.**
3. **On the Bluetooth remote commander, perform pairing.**
   - For details, refer to the instruction manual for the Bluetooth remote commander.
4. **On the camera, select [OK] on the confirmation screen for the Bluetooth connection.**
   - Pairing is complete, and you can now operate the camera from the Bluetooth remote commander. After pairing the device once, you can connect the camera and the Bluetooth remote commander again in the future by setting [Bluetooth Rmt Ctrl] to [On].

Menu item details

On:
Enables Bluetooth remote commander operation.
Off:
Disables Bluetooth remote commander operation.

Hint

- The Bluetooth connection is only active while you are operating the camera using the Bluetooth remote commander.

Note

- When you initialize the camera, the pairing information is also deleted. To use the Bluetooth remote commander, perform pairing again.
- If the Bluetooth connection is unstable, remove any obstacles, such as people or metal objects from between the camera and the paired Bluetooth remote commander.
- The following functions cannot be used when [Bluetooth Rmt Ctrl] is set to [On].
  - Linking location information with a smartphone
  - Infrared remote commander
  - Power-saving mode
- If the function does not work properly, check the following notes and then try pairing again.
  - Confirm that the camera is not connected with other devices using the Bluetooth function.
  - Confirm that [Airplane Mode] for the camera is set to [Off].
  - Execute [Reset Network Set.] of the camera.

Related Topic

- Bluetooth Settings
- Reset Network Set.

5-021-326-12(1) Copyright 2020 Sony Corporation

WPS Push

If your access point has a Wi-Fi Protected Setup (WPS) button, you can register the access point to this product easily. For details about the available functions and settings of your access point, see the access point operating instructions or contact the administrator of the access point.

1. **MENU → (Network) → [Wi-Fi] → [WPS Push].**
2. **Push the Wi-Fi Protected Setup (WPS) button on the access point to connect.**

Note

- [WPS Push] works only if the security setting of your access point is set to WPA or WPA2 and your access point supports the Wi-Fi Protected Setup (WPS) button method. If the security setting is set to WEP or your access point does not support the Wi-Fi Protected Setup (WPS) button method, perform [Access Point Set.].
- A connection may not be possible or the communication distance may be shorter depending on the surrounding conditions, such as the type of wall material and the presence of obstructions or radio waves between the product and access point. In this case, change the location of the product or move the product closer to the access point.

Related Topic

- Access Point Set.

5-021-326-12(1) Copyright 2020 Sony Corporation

Interchangeable Lens Digital Camera
ILCE-7SM3 α7SIII

Access Point Set.

You can register your access point manually. Before starting the procedure, check the SSID name of the access point, security system, and password. The password may be preset in some devices. For details, see the access point operating instructions, or consult the access point administrator.

1. **MENU → (Network) → [Wi-Fi] → [Access Point Set.].**

2. **Select the access point you want to register.**

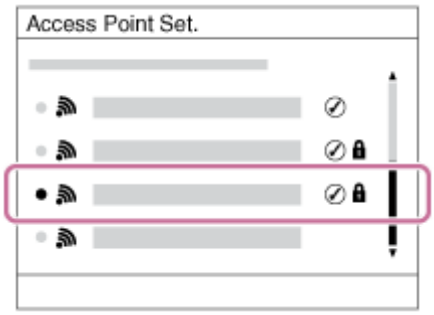

When the desired access point is displayed on the screen: Select the desired access point.
When the desired access point is not displayed on the screen: Select [Manual Setting] and set the access point.

- If you select [Manual Setting], input the SSID name of the access point, then select the security system.

3. **Input the password, and select [OK].**

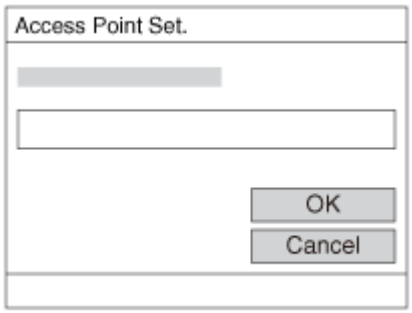

- Access points without (Key mark) do not require a password.

4. **Select [OK].**

Other setting items

Depending on the status or the setting method of your access point, you may want to set more items.

WPS PIN:
Displays the PIN code you enter into the connected device.
Priority Connection:
Select [On] or [Off].
IP Address Setting:

Select [Auto] or [Manual].

IP Address:

If you are entering the IP address manually, enter the set address.

Subnet Mask/Default Gateway/Primary DNS Server/Second DNS Server:

If you have set [IP Address Setting] to [Manual], enter each address according to your network environment.

Note

- To give the registered access point priority in the future, set [Priority Connection] to [On].

Related Topic

- WPS Push
- Using the keyboard

5-021-326-12(1) Copyright 2020 Sony Corporation

Wi-Fi Frequency Band (models supporting 5 GHz)

Sets the frequency band for Wi-Fi communications. [5GHz] has faster communication speeds and more stable data transfers than [2.4GHz]. The [Wi-Fi Frequency Band] setting applies to smartphone transfers, remote operations using a smartphone, and the PC remote function via Wi-Fi Direct connection.

1. **MENU → (Network) → [Wi-Fi] → [Wi-Fi Frequency Band] → desired setting.**

Menu item details

2.4GHz/5GHz

Note

- If there are both 2.4 GHz and 5 GHz access points with the same SSID and encryption format, the access point with the stronger radio field will be displayed.

5-021-326-12(1) Copyright 2020 Sony Corporation

Interchangeable Lens Digital Camera
ILCE-7SM3 α7SIII

Display Wi-Fi Info.

Displays Wi-Fi information for the camera such as the MAC address, IP address, etc.

1. **MENU → (Network) → [Wi-Fi] → [Display Wi-Fi Info.].**

Hint

- Information other than the MAC address is displayed under the following conditions.
  - [FTP Function] under [FTP Transfer Func.] is set to [On], and a Wi-Fi connection has been established.
  - [PC Remote] is set to [On] and [PC Remote Cnct Method] is set to [Wi-Fi Access Point] under [PC Remote Function], and a Wi-Fi connection has been established.

To display the QR Code for the MAC address

- You can import the MAC address of this camera to a smartphone. Use one of the following methods to display the QR Code on the screen, and read the QR Code using the Transfer & Tagging add-on smartphone application.
  - When the camera is turned off, turn the camera on while pressing the (Playback) button.
  - Press the (Delete) button on the [Display Wi-Fi Info.] screen.

  For details on how to read the QR Code using the Transfer & Tagging add-on, refer to the following support page.
  https://support.d-imaging.sony.co.jp/app/transfer/l/macaddress/index.php
  The Transfer & Tagging add-on is only available in certain countries and regions.

5-021-326-12(1) Copyright 2020 Sony Corporation

Interchangeable Lens Digital Camera
ILCE-7SM3 α7SIII

SSID/PW Reset

This product shares connection information with devices that have permission to connect when connecting to a smartphone or establishing a Wi-Fi Direct connection with a computer. If you want to change which devices have permission to connect, reset the connection information.

1 **MENU → (Network) → [Wi-Fi] → [SSID/PW Reset] → [OK].**

Note

- If you connect this product to a smartphone after resetting the connection information, you must make the settings for the smartphone again.
- If you connect this product to a computer with Wi-Fi Direct after resetting the connection information, you must reconfigure the settings of the computer.

Related Topic

- Send to Smartphone
- Ctrl w/ Smartphone
- Operating the camera from a computer (PC Remote Function)

5-021-326-12(1) Copyright 2020 Sony Corporation

Interchangeable Lens Digital Camera
ILCE-7SM3 α7SIII

Bluetooth Settings

Controls the settings for connecting the camera to a smartphone or Bluetooth remote commander via a Bluetooth connection.
If you want to pair the camera and smartphone in order to use the location information link function, refer to “ Location Information .”
If you want to perform pairing in order to use a Bluetooth remote commander, refer to “ Bluetooth Rmt Ctrl .”

1 **MENU → (Network) → [Bluetooth] → Select a menu item and set the desired parameter.**

Menu item details

Bluetooth Function:
Sets whether to activate or not the Bluetooth function of the camera. (On/Off)
Pairing:
Displays the screen for pairing the camera and smartphone or Bluetooth remote commander.
Disp Device Address:
Displays the BD address of the camera.

Related Topic

- Location Information
- Bluetooth Rmt Ctrl
- Cnct. during Power OFF

5-021-326-12(1) Copyright 2020 Sony Corporation

Interchangeable Lens Digital Camera
ILCE-7SM3 α7SIII

Wired LAN (USB-LAN)

Configures a wired LAN. You can connect this product to a network via wired LAN by connecting a commercially available USB-LAN conversion adaptor to the USB Type-C terminal on the product.

1 **MENU → (Network) → [Wired LAN] → desired setting.**

Menu item details

LAN IP Address Setting:
Sets whether to configure the IP address for the wired LAN automatically or manually. ([Auto]/[Manual])

Display Wired LAN Info.:
Displays wired LAN information for this product such as the MAC address or IP address.

IP Address:
If you are entering the IP address manually, enter the fixed address.

Subnet Mask/Default Gateway/Primary DNS Server/Second DNS Server:
If you have set [LAN IP Address Setting] to [Manual], enter each address according to your network environment.

Hint

- We recommend that you use a gigabit ethernet adaptor for USB Type-C connections.

To display the QR Code for the MAC address

- You can import the MAC address of this camera to a smartphone. Use one of the following methods to display the QR Code on the screen, and read the QR Code using the Transfer & Tagging add-on smartphone application.
  - When the camera is turned off, turn the camera on while pressing the ▶ (Playback) button.
  - Press the (Delete) button on the [Display Wired LAN Info.] screen.

  For details on how to read the QR Code using the Transfer & Tagging add-on, refer to the following support page.
  https://support.d-imaging.sony.co.jp/app/transfer/l/macaddress/index.php
  The Transfer & Tagging add-on is only available in certain countries and regions.

Note

- Not all types of USB-LAN conversion adaptors are guaranteed to operate properly.

Related Topic

- Using the keyboard

5-021-326-12(1) Copyright 2020 Sony Corporation

Interchangeable Lens Digital Camera
ILCE-7SM3 α7SIII

Airplane Mode

When you board an airplane, etc., you can temporarily disable all the wireless-related functions including Wi-Fi.

1. **MENU → (Network) → [Network Option] → [Airplane Mode] → desired setting.**

   If you set [Airplane Mode] to [On], an airplane mark will be displayed on the screen.

5-021-326-12(1) Copyright 2020 Sony Corporation

Interchangeable Lens Digital Camera
ILCE-7SM3 α7SIII

Edit Device Name

You can change the device name for Wi-Fi Direct, [PC Remote], or Bluetooth connections.

1. **MENU → (Network) → [Network Option] → [Edit Device Name].**
2. **Select the input box, then input the device name → [OK].**

Related Topic

- WPS Push
- Access Point Set.
- Operating the camera from a computer (PC Remote Function)
- Using the keyboard

5-021-326-12(1) Copyright 2020 Sony Corporation

Interchangeable Lens Digital Camera
ILCE-7SM3 α7SIII

Importing root certification to the camera (Import Root Certificate)

Imports a root certificate needed to verify a server from a memory card. Use this function for encrypted communications during FTP transfer.
For details, refer to the “FTP Help Guide.”
https://rd1.sony.net/help/di/ftp_2010/h_zz/

1 **MENU → (Network) → [Network Option] → [Import Root Certificate].**

5-021-326-12(1) Copyright 2020 Sony Corporation

Interchangeable Lens Digital Camera
ILCE-7SM3 α7SIII

Security(IPsec)

Encrypts data when the camera and a computer communicate via a wired LAN or Wi-Fi connection.

1 **MENU → (Network) → [Network Option] → [Security(IPsec)] → desired setting.**

Menu item details

IPsec:
Sets whether or not the [Security(IPsec)] function is used. ([On]/[Off])

Dest. IP Address:
Sets the IP address of the device to connect using the [Security(IPsec)] function.

Shared Key:
Sets the shared key used by the [Security(IPsec)] function.

Note

- Use at least eight and no more than 20 alphanumeric characters or symbols for [Shared Key].
- For IPsec communications, the device to connect must be compatible with IPsec.
  Depending on the device, communications may not be possible or the communication speed may be slow.
- On this camera, IPsec operates in transport mode only and uses IKEv2.
  The algorithms are AES with 128-bit keys in CBC mode/Diffie-Hellman 3072-bit modp group/PRF-HMAC-SHA-256/HMAC-SHA-384-192.
  The authentication expires after 24 hours.
- Encrypted communications can only be made with devices that are configured correctly. Communications with other devices are not encrypted.
- For details on the IPsec configuration, consult the administrator of the network for your device.

Related Topic

- Using the keyboard

5-021-326-12(1) Copyright 2020 Sony Corporation

Interchangeable Lens Digital Camera
ILCE-7SM3 α7SIII

Reset Network Set.

Resets all the network settings to default settings.

1 **MENU → (Network) → [Network Option] → [Reset Network Set.] → [Enter].**

5-021-326-12(1) Copyright 2020 Sony Corporation

Interchangeable Lens Digital Camera
ILCE-7SM3 α7SIII

FTP Transfer Func.

You can set up image transferring using an FTP server or transfer images to the FTP server. Basic knowledge of FTP servers is required.
For details, refer to the “FTP Help Guide.”
https://rd1.sony.net/help/di/ftp_2010/h_zz/

1 **MENU → (Network) → [Transfer/Remote] → [FTP Transfer Func.] → desired setting.**

Related Topic

- Importing root certification to the camera (Import Root Certificate)

5-021-326-12(1) Copyright 2020 Sony Corporation

Interchangeable Lens Digital Camera
ILCE-7SM3 α7SIII

Monitor Brightness

Adjust the brightness of the screen.

1 **MENU → (Setup) → [Finder/Monitor] → [Monitor Brightness] → desired setting.**

Menu item details

Manual:
Adjusts the brightness within the range of –2 to +2.

Sunny Weather:
Sets the brightness appropriately for shooting outdoors.

Note

- The [Sunny Weather] setting is too bright for shooting indoors. Set [Monitor Brightness] to [Manual] for indoor shooting.

5-021-326-12(1) Copyright 2020 Sony Corporation

Viewfinder Bright.

When using the viewfinder, this product adjusts the brightness of the viewfinder according to the surrounding environment.

1 **MENU → (Setup) → [Finder/Monitor] → [Viewfinder Bright.] → desired setting.**

Menu item details

Auto:
Adjusts the brightness automatically.
Manual:
Selects the brightness of the viewfinder within the range of –2 to +2.

5-021-326-12(1) Copyright 2020 Sony Corporation

Interchangeable Lens Digital Camera
ILCE-7SM3 α7SIII

Finder Color Temp.

Adjusts the color temperature of the viewfinder.

1 **MENU → (Setup) → [Finder/Monitor] → [Finder Color Temp.] → desired setting.**

Menu item details

-2 to +2:
When you select “-,” the viewfinder screen changes to a warmer color, and when you select “+,” it changes to a colder color.

5-021-326-12(1) Copyright 2020 Sony Corporation

Interchangeable Lens Digital Camera
ILCE-7SM3 α7SIII

Viewfinder Magnifi.

Sets the display magnification of the viewfinder. If you select [Zoom Out], the viewing angle will become narrower. You can easily check the overall composition even when wearing glasses.

1 **MENU → (Setup) → [Finder/Monitor] → [Viewfinder Magnifi.] → desired setting.**

Menu item details

Standard:
Sets the viewfinder display magnification to standard.
Zoom Out:
Reduces the viewfinder display magnification.

5-021-326-12(1) Copyright 2020 Sony Corporation

Interchangeable Lens Digital Camera
ILCE-7SM3 α7SIII

Finder Frame Rate (still image)

Display the subject's movements more smoothly by adjusting the frame rate of the viewfinder during still image shooting. This function is convenient when shooting a fast-moving subject.

1. **MENU → (Setup) → [Finder/Monitor] → [Finder Frame Rate] → desired setting.**
   - This function can be assigned to key of your choice using [Custom Key Setting].

Menu item details

Standard:
Displays the subject at a normal frame rate on the viewfinder.
High:
Displays the movements of the subject more smoothly on the viewfinder.

Note

- When [Finder Frame Rate] is set to [High], the resolution of the viewfinder is lowered.
- Even when [Finder Frame Rate] is set to [High], the setting may switch to [Standard] automatically depending on the temperature of the shooting environment and the shooting conditions.
- [Finder Frame Rate] is locked to [Standard] in the following situations:
  - During playback
  - During HDMI connection
  - When the temperature inside the camera's body is high

Related Topic

- Assigning frequently used functions to buttons (Custom Key Setting)

5-021-326-12(1) Copyright 2020 Sony Corporation

Power Save Start Time

Sets time intervals to automatically switch to power save mode when you are not performing operations to prevent wearing down the battery pack. To return to shooting mode, perform an operation such as pressing the shutter button halfway down.

1. **MENU → (Setup) → [Power Setting Option] → [Power Save Start Time] → desired setting.**

Menu item details

30 Min/5 Min/2 Min/1 Min/10 Sec

Note

- Turn off the product when you do not use it for a long time.
- The power save function is deactivated in the following situations:
  - While power is being supplied via USB
  - While playing back slideshows
  - During FTP transfer
  - While recording movies
  - While connected to a computer or TV
  - While [IR Remote Ctrl] is set to [On]
  - When [Bluetooth Rmt Ctrl] is set to [On]

5-021-326-12(1) Copyright 2020 Sony Corporation

Auto Power OFF Temp.

Sets the temperature of the camera at which the camera turns off automatically during shooting. When it is set to [High], you can continue shooting even when the temperature of the camera gets hotter than normal.

1 **MENU → (Setup) → [Power Setting Option] → [Auto Power OFF Temp.] → desired setting.**

Menu item details

Standard:
Sets the standard temperature for the camera to turn off.
High:
Sets the temperature at which the camera turns off to higher than [Standard].

Notes when [Auto Power OFF Temp.] is set to [High]

- Do not shoot while holding the camera in your hand. Use a tripod.
- Using the camera while holding it in your hand for a long period of time may cause low-temperature burns.

Continuous recording time for movies when [Auto Power OFF Temp.] is set to [High]

The duration of time available for continuous movie recording is as follows when the camera starts recording with the default settings after the power has been turned off for a while. The following values indicate the continuous time from when the camera starts recording until the camera stops recording.

Ambient temperature: 25°C (77°F)
Continuous recording time for movies (HD): Approx. 120 minutes
Continuous recording time for movies (4K): Approx. 90 minutes
Ambient temperature: 40°C (104°F)
Continuous recording time for movies (HD): Approx. 90 minutes
Continuous recording time for movies (4K): Approx. 60 minutes
HD: XAVC S HD (60p 50M/50p 50M 4:2:0 8bit; when the camera is not connected via Wi-Fi; when using a CFexpress Type A memory card; when the monitor is open)
4K: XAVC S 4K (60p 150M/50p 150M 4:2:0 8bit; when the camera is not connected via Wi-Fi; when using a CFexpress Type A memory card; when the monitor is open)

Note

- Even if [Auto Power OFF Temp.] is set to [High], depending on the conditions or the temperature of the camera, the recordable time for movies may not change.

Related Topic

- Recordable movie times

5-021-326-12(1) Copyright 2020 Sony Corporation

Display Quality

You can change the display quality.

1 **MENU → (Setup) → [Finder/Monitor] → [Display Quality] → desired setting.**

Menu item details

High:
Displays in high quality.

Standard:
Displays in standard quality.

Note

- When [High] is set, battery consumption will be higher than when [Standard] is set.
- When the temperature of the camera rises, the setting may become locked to [Standard].

5-021-326-12(1) Copyright 2020 Sony Corporation

Interchangeable Lens Digital Camera
ILCE-7SM3 α7SIII

USB Connection

Selects the USB connection method when this product is connected to a computer, etc.
Select MENU → (Network) → [Transfer/Remote] → [Ctrl w/ Smartphone] → [Ctrl w/ Smartphone] → [Off] beforehand.
Also, when you set MENU → (Network) → [Transfer/Remote] → [PC Remote Function] → [PC Remote Cnct Method] to [USB], set [PC Remote] under [PC Remote Function] to [Off].

1. **MENU → (Setup) → [USB] → [USB Connection] → desired setting.**

Menu item details

Auto:
Establishes a Mass Storage or MTP connection automatically, depending on the computer or other USB devices to be connected.

Mass Storage:
Establishes a Mass Storage connection between this product, a computer, and other USB devices.

MTP:
Establishes an MTP connection between this product, a computer, and other USB devices.

- The memory card in memory card slot 1 is the connection target.

Note

- It may take some time to make the connection between this product and a computer when [USB Connection] is set to [Auto].

5-021-326-12(1) Copyright 2020 Sony Corporation

Interchangeable Lens Digital Camera
ILCE-7SM3 α7SIII

USB LUN Setting

Enhances compatibility by limiting of USB connection functions.

1 **MENU → (Setup) → [USB] → [USB LUN Setting] → desired setting.**

Menu item details

Multi:
Normally, use [Multi].

Single:
Set [USB LUN Setting] to [Single] only if you cannot make a connection.

5-021-326-12(1) Copyright 2020 Sony Corporation

USB Power Supply

Sets whether to supply power via the USB cable when the product is connected to a computer or an USB device.

1. **MENU → (Setup) → [USB] → [USB Power Supply] → desired setting.**

Menu item details

On:
Power is supplied to the product via a USB cable when the product is connected to a computer, etc.
Off:
Power is not supplied to the product via a USB cable when the product is connected to a computer, etc.

Operations available while supplying power via a USB cable

The following table shows you which operations are available/unavailable while supplying power via a USB cable.

Operation	Available / Unavailable
Shooting images	Available
Playing back images	Available
Wi-Fi/NFC/Bluetooth connections	Available
Charging a battery pack	Unavailable
Turning the camera on without a battery pack inserted	Unavailable

Note

- Insert the battery pack into the product to supply power via USB cable.
- This product cannot be powered via the Multi/Micro USB terminal. Use the USB Type-C terminal.

5-021-326-12(1) Copyright 2020 Sony Corporation

Interchangeable Lens Digital Camera
ILCE-7SM3 α7SIII

HDMI Resolution

When you connect the camera to a TV or monitor device using an HDMI cable (sold separately), you can select the resolution to be output from the HDMI terminal of the camera during still image shooting or playback.

1. **MENU → (Setup) → [External Output] → [HDMI Resolution] → desired setting.**

Menu item details

Auto:
The camera automatically recognizes the resolution of the connected TV or output device and sets the output resolution accordingly.
2160p:
Outputs signals in 2160p.
1080p:
Outputs signals in HD picture quality (1080p).
1080i:
Outputs signals in HD picture quality (1080i).

Note

- If images are not displayed properly using the [Auto] setting, select [1080i], [1080p], or [2160p] based on the connected TV.

5-021-326-12(1) Copyright 2020 Sony Corporation

Interchangeable Lens Digital Camera
ILCE-7SM3 α7SIII

HDMI Output Settings (movie)

Sets the video and audio to be output to an external recorder/player connected via HDMI when shooting a movie.
Use a Premium High Speed HDMI Cable (sold separately) to output 4K movies or RAW movies.

1 **MENU → (Setup) → [External Output] → [HDMI Output Settings] → desired setting item.**

Menu item details

Rec. Media dur HDMI Output:
Sets whether or not to record movies on the memory card of the camera during HDMI output.
[On]: Records movies on the memory card of the camera, and outputs the movies to the HDMI-connected device at the same time. The color depth for the output movie is based on [Record Setting] under [Movie Settings].
[Off(HDMI Only)]: Does not record movies on the memory card of the camera, and outputs movies only to devices connected via HDMI.

Output Resolution:
Sets the resolution of the image that will be output to another device connected via HDMI when [Rec. Media dur HDMI Output] is set to [On] and [RAW Output] is set to [Off]. ([Auto] / [2160p] / [1080p] / [1080i])

4K Output Set.(HDMI Only):
Sets the frame rate and color depth of 4K movie output to another device connected via HDMI when [Rec. Media dur HDMI Output] is set to [Off(HDMI Only)] and [RAW Output] is set to [Off]. ([60p 10bit] / [50p 10bit] / [30p 10bit] / [25p 10bit] / [24p 10bit])

RAW Output:
Sets whether or not to output RAW movies to another RAW-compatible device connected via HDMI. ([On] / [Off])

RAW Output Setting:
Sets the frame rate when outputting RAW movies to another RAW-compatible device connected via HDMI. ([60p] / [50p] / [30p] / [25p] / [24p])

Color Gamut for RAW Output:
Sets the color gamut when outputting RAW movies to another RAW-compatible device connected via HDMI. ([S-Gamut3.Cine/S-log3] / [S-Gamut3/S-log3])

Time Code Output:
Sets whether or not to output the time code and user bit to another device connected via HDMI. ([On] / [Off])
Time code information is transmitted as digital data, not as an image displayed on the screen. The connected device can then refer to the digital data in order to recognize the time data.

REC Control:
Sets whether to start or stop recording on the external recorder/player remotely by operating the camera when the camera is connected to an external recorder/player. ([On] / [Off])

4ch Audio Output:
When recording audio in 4 channels, set the combination of audio channels that will be output to other devices connected via HDMI.
[CH1/CH2]: Outputs audio from channel 1 to the L (left) side and from channel 2 to the R (right) side.
[CH3/CH4]: Outputs audio from channel 3 to the L (left) side and from channel 4 to the R (right) side.

Hint

- With [REC Control] set to [On], STBY (STBY) is displayed when a recording command is ready to be sent to the external recorder/player, and REC (REC) is displayed when a recording command is being sent to the external recorder/player.
- Even when playing back a movie with 4 channels on a device connected to the HDMI terminal of the camera, the audio is output with the [4ch Audio Output] setting.

Note

- RAW movies cannot be recorded on the memory card of the camera.
- During slow-motion/quick-motion shooting, [Rec. Media dur HDMI Output] is locked to [On] and [RAW Output] is locked to [Off]. It is not possible to only output 4K movies to a device connected via HDMI without recording the movies on a memory card. It is also not possible to output RAW movies.
- When [Rec. Media dur HDMI Output] is set to [Off(HDMI Only)] or the camera outputs RAW movies, [HDMI Info. Display] becomes temporarily set to [Off].
- When [Rec. Media dur HDMI Output] is set to [Off(HDMI Only)], the counter does not move forward (the actual recording time is not counted) while the movie is being recorded on an external recorder/player.
- [REC Control] can be used with external recorders/players that support the [REC Control] function.
- When [Time Code Output] is set to [Off], you cannot set [REC Control].
- Even when REC (REC) is displayed, the external recorder/player may not work properly depending on the settings or status of the recorder/player. Check if the external recorder/player works properly before use.
- When [Time Code Output] is set to [On], images may not be output properly to the TV or recording device. In this case, set [Time Code Output] to [Off].
- It is not possible to output audio in 4 channels to other devices connected via HDMI.
- The gamma is locked to S-Log3 during RAW output. You can reproduce contrast equivalent to that of the normal gamma by setting [Gamma Display Assist] to [On] and [Gamma Disp. Assist Typ.] to [Auto] or [S-Log3→709(800%)].
- While outputting RAW movies, you cannot use [Active] for [SteadyShot].

5-021-326-12(1) Copyright 2020 Sony Corporation

Interchangeable Lens Digital Camera
ILCE-7SM3 α7SIII

HDMI Info. Display

Selects whether or not to display shooting information on a TV or a monitor device when the camera and TV, etc. are connected via an HDMI cable (sold separately).

1 **MENU → (Setup) → [External Output] → [HDMI Info. Display] → desired setting.**

Menu item details

On:
Displays the shooting information on the TV.
The recorded image and shooting information are displayed on the TV, while nothing is displayed on the camera's monitor.
Off:
Does not display the shooting information on the TV.
Only the recorded image is displayed on the TV, while the recorded image and shooting information are displayed on the camera's monitor.

5-021-326-12(1) Copyright 2020 Sony Corporation

Interchangeable Lens Digital Camera
ILCE-7SM3 α7SIII

CTRL FOR HDMI

When connecting this product to a “BRAVIA” Sync-compatible TV using an HDMI cable (sold separately), you can operate this product by aiming the TV remote control at the TV.

1. **MENU → (Setup) → [External Output] → [CTRL FOR HDMI] → desired setting.**
2. **Connect this product to a “BRAVIA” Sync-compatible TV.**

   The input of the TV is switched automatically and images on this product are displayed on the TV screen.
3. **Press the SYNC MENU button of the TV’s remote control.**
4. **Operate this product using the TV’s remote control.**

Menu item details

On:
You can operate this product with a TV’s remote control.
Off:
You cannot operate this product with a TV’s remote control.

Note

- If you connect this product to a TV using an HDMI cable, available menu items are limited.
- [CTRL FOR HDMI] is available only with a “BRAVIA” Sync-compatible TV. Also, the SYNC MENU operation differs depending on the TV you are using. For details, refer to the operating instructions supplied with the TV.
- If the product performs unwanted operations in response to the TV remote control when the product is connected to another manufacturer’s TV using an HDMI connection, set [CTRL FOR HDMI] to [Off].

5-021-326-12(1) Copyright 2020 Sony Corporation

Interchangeable Lens Digital Camera
ILCE-7SM3 α7SIII

Language

Selects the language to be used in the menu items, warnings and messages.

1 **MENU → (Setup) → [Area/Date] → [Language] → desired language.**

5-021-326-12(1) Copyright 2020 Sony Corporation

Interchangeable Lens Digital Camera
ILCE-7SM3 α7SIII

Area/Date/Time Setting

You can set the area (where you are using the camera), daylight savings ([On]/[Off]), the date display format, and the date and time.
The Area/Date/Time Setting screen is displayed automatically when you turn on the product for the first time or when the internal rechargeable backup battery has fully discharged. Select this menu when setting the date and time after the first time.

1 **MENU → (Setup) → [Area/Date] → [Area/Date/Time Setting] → desired setting.**

Menu item details

Area Setting:
Sets the area where you are using the camera.
Daylight Savings:
Selects Daylight Savings [On] / [Off].
Date/Time:
Sets the date and time.
Date Format:
Selects the date display format.

Hint

- To charge the internal rechargeable backup battery, insert a charged battery pack, and leave the product for 24 hours or more with the power off.
- If the clock resets every time the battery is charged, the internal rechargeable backup battery may be worn out. Consult your service facility.

Related Topic

- Setting language, date and time

5-021-326-12(1) Copyright 2020 Sony Corporation

NTSC/PAL Selector

Plays back movies recorded with the product on a NTSC/PAL system TV.

1. **MENU →** **(Setup) → [Area/Date] → [NTSC/PAL Selector] → [Enter]**

Note

- When you perform [NTSC/PAL Selector], and the setting is changed from the default one, a message "Running on NTSC." or "Running on PAL." will appear on the start-up screen.

5-021-326-12(1) Copyright 2020 Sony Corporation

Audio signals

Selects whether the product produces a sound or not.

1 **MENU → (Setup) → [Sound Option] → [Audio signals] → desired setting.**

Menu item details

On:
Sounds are produced for example when the focus is achieved by pressing the shutter button halfway down.
Off:
Sounds are not produced.

Hint

- When [Silent Mode] is set to [On], [Audio signals] becomes locked to [Off].

Note

- If [Focus Mode] is set to [Continuous AF], the camera will not beep when it focuses on a subject.

5-021-326-12(1) Copyright 2020 Sony Corporation

Interchangeable Lens Digital Camera
ILCE-7SM3 α7SIII

IR Remote Ctrl

You can operate the camera using a Infrared Remote Commander (sold separately). For details on compatible remote commander, visit the Sony web site in your area, or consult your Sony dealer or local authorized Sony service facility. Refer also to the operating instructions for the Infrared Remote Commander.

1 **MENU → (Setup) → [Setup Option] → [IR Remote Ctrl] → desired setting.**

Menu item details

On:
Allows infrared remote commander operation.
Off:
Does not allow infrared remote commander operation.

Note

- The lens or lens hood may block the infrared remote sensor that receive the signals. Use the infrared remote commander in the position from which the signal can reach the product.
- When [IR Remote Ctrl] is set to [On], the product does not switch to power save mode. Set [Off] after using an infrared remote commander.
- An infrared remote commander cannot be used while [Bluetooth Rmt Ctrl] is set to [On].

5-021-326-12(1) Copyright 2020 Sony Corporation

Interchangeable Lens Digital Camera
ILCE-7SM3 α7SIII

Auto Pixel Mapping

Sets whether or not to automatically optimize the image sensor (pixel mapping). Normally, set this function to [On].

1 **MENU → (Setup) → [Setup Option] → [Auto Pixel Mapping] → desired setting.**

Menu item details

On:
Performs pixel mapping automatically at regular intervals when you turn off the camera.
During this time, shutter sounds will be produced.
Off:
Does not perform pixel mapping automatically.

Hint

- If [Auto Pixel Mapping] is set to [Off], perform [Pixel Mapping] regularly. We recommend that you perform the operation once every three days.

Note

- If [Pixel Mapping] is not performed regularly, bright spots may appear in recorded images.

Related Topic

- Pixel Mapping
- Silent Mode Settings (still image/movie)

5-021-326-12(1) Copyright 2020 Sony Corporation

Interchangeable Lens Digital Camera
ILCE-7SM3 α7SIII

Pixel Mapping

You can manually optimize the image sensor (pixel mapping). If [Auto Pixel Mapping] is set to [Off], perform [Pixel Mapping] regularly according to the following procedure. We recommend that you perform the operation once every three days.

1. **MENU → (Setup) → [Setup Option] → select [Pixel Mapping].**

2. **Select [OK] on the confirmation screen.**

   Pixel mapping will be performed.

   - The camera cannot be operated during pixel mapping.
   - The camera will restart when pixel mapping is complete.

Hint

- If you see bright spots in a recorded image on the camera monitor, immediately perform [Pixel Mapping].

Note

- Pixel mapping cannot be performed when the battery is low.

Related Topic

- Auto Pixel Mapping

5-021-326-12(1) Copyright 2020 Sony Corporation

Interchangeable Lens Digital Camera
ILCE-7SM3 α7SIII

Version

Displays the version of this product’s software. Check the version when updates for this product’s software are released, etc.
Also displays the version of the lens if a lens compatible with firmware updates is attached.
The version of the Mount Adaptor is displayed in the lens area if a Mount Adaptor compatible with firmware updates is attached.

1. **MENU → (Setup) → [Setup Option] → [Version].**

Note

- Updating can be performed only when the battery level is (3 remaining battery bars) or more. Use a sufficiently charged battery pack.

5-021-326-12(1) Copyright 2020 Sony Corporation

Interchangeable Lens Digital Camera
ILCE-7SM3 α7SIII

Save/Load Settings

You can save/load camera settings to/from a memory card. You can also load settings from another camera of the same model.

1 **MENU → (Setup) → [Reset/Save Settings] → [Save/Load Settings] → desired item.**

Menu item details

Load:
Loads the settings from a memory card to this camera.
Save:
Saves the current settings of this camera to a memory card.
Delete:
Deletes the settings saved on a memory card.

Settings that cannot be saved

The following setting parameters cannot be saved using the [Save/Load Settings] function. (Menu items without setting parameters, such as, [Focus Magnifier], are not listed.)

(Shooting)
IPTC Information
Copyright Info

(Exposure/Color)
External Flash Set.
White Balance: Custom 1/Custom 2/Custom 3

(Focus)
Face Memory

(Network)
FTP Transfer Func.*
WPS Push
Access Point Set.
Wi-Fi Frequency Band
IP Address Setting
Edit Device Name
Import Root Certificate
Security(IPsec)

* You can save or load settings under [FTP Transfer Func.] by selecting MENU → (Network) → [Transfer/Remote] → [FTP Transfer Func.] → [Save/Load FTP Settings]. For details, refer to the “FTP Help Guide.”
https://rd1.sony.net/help/di/ftp_2010/h_zz/

(Setup)
Area/Date/Time Setting

Note

- You can save up to 10 settings per memory card. When 10 settings have been already saved, you cannot perform [Save New]. Delete the existing settings using [Delete], or overwrite them.
- Only Slot 1 is used for saving or loading data. You cannot change the saving/loading destination slot.
- You cannot load settings from a camera of a different model.
- You can use this function to save settings registered to [MR Camera Set. Memory]. However, [Save/Load Settings] is unavailable when the mode dial is set to 1/2/3 (MR Recall Camera Setting). Set the mode dial to a position other than 1/2/3 before using this function.

5-021-326-12(1) Copyright 2020 Sony Corporation

Interchangeable Lens Digital Camera
ILCE-7SM3 α7SIII

Setting Reset

Resets the product to the default settings. Even if you perform [Setting Reset], the recorded images are retained.

1 **MENU → (Setup) → [Reset/Save Settings] → [Setting Reset] → desired setting.**

Menu item details

Camera Settings Reset:
Initializes the main shooting settings to the default settings. The setting values for both still image shooting and movie recording are initialized.

Initialize:
Initializes all the settings to the default settings.

Note

- Be sure not to eject the battery pack while resetting.
- Settings of [Picture Profile] will not be reset even when [Camera Settings Reset] or [Initialize] is performed.
- The check mark for [Picture Profile] in [Different Set for Still/Mv] is not reset when you perform either [Camera Settings Reset] or [Initialize].

Related Topic

- List of default setting values

5-021-326-12(1) Copyright 2020 Sony Corporation

Interchangeable Lens Digital Camera
ILCE-7SM3 α7SIII

Functions available with a smartphone (Imaging Edge Mobile)

Using the smartphone application Imaging Edge Mobile, you can shoot an image while controlling the camera using a smartphone or transfer the images recorded on the camera to the smartphone.
Download and install the application Imaging Edge Mobile from your smartphone's application store. If Imaging Edge Mobile is already installed on your smartphone, be sure to update it to the latest version.
For details on Imaging Edge Mobile, refer to the support page (https://www.sony.net/iem/).

Note

- Depending on future version upgrades, the operational procedures or screen displays are subject to change without notice.

5-021-326-12(1) Copyright 2020 Sony Corporation

Interchangeable Lens Digital Camera
ILCE-7SM3 α7SIII

Connecting the camera and a smartphone using the QR Code

You can connect your smartphone to the camera using the QR Code. You can connect to the camera with the same operation on any Android smartphone, iPhone, or iPad.

To connect the camera and your smartphone, Imaging Edge Mobile is required. Download and install the application Imaging Edge Mobile from your smartphone's application store. If Imaging Edge Mobile is already installed on your smartphone, be sure to update it to the latest version. For details on Imaging Edge Mobile, refer to the support page (https://www.sony.net/iem/).

1 Display the QR code screen on the camera.

When using a smartphone as a remote controller:
MENU → (Network) → [Transfer/Remote] → [Ctrl w/ Smartphone] → Perform the following operations.

- Set [Ctrl w/ Smartphone] to [On].
- Execute [Connection].

When transferring images to your smartphone:
MENU → (Network) → [Transfer/Remote] → [Send to Smartphone] → [Select on This Device] → Select images to transfer.
To select images on your smartphone, choose [Select on Smartphone].

2 Launch Imaging Edge Mobile on your smartphone and select [Connect with a new camera].

3 Scan the QR Code displayed on the camera while the [Connect using the camera QR Code] screen is displayed on the smartphone.

Once the QR Code has been read, a message [Connect with the camera?] will be displayed on the smartphone screen.

4 Select [OK] on the smartphone screen.

The smartphone is connected to the camera.

Hint

- Once the QR Code has been read, this camera's SSID (DIRECT-xxxx) and password are registered to the smartphone. This enables you to easily connect the smartphone to the camera via Wi-Fi at a later date by selecting the camera from the camera list in Imaging Edge Mobile. (Set [Ctrl w/ Smartphone] to [On] in advance.)

Note

- Radio wave interference may occur as Bluetooth communications and Wi-Fi (2.4 GHz) communications use the same frequency band. If your Wi-Fi connection is unstable, it may be improved by turning off the Bluetooth function of the smartphone. If you do this, the location information link function is not available.
- If you cannot connect your smartphone to the camera using the NFC function or QR Code, use the SSID and password.

Related Topic

- Functions available with a smartphone (Imaging Edge Mobile)
- Ctrl w/ Smartphone
- Send to Smartphone
- Connecting the camera and a smartphone using the SSID and password

5-021-326-12(1) Copyright 2020 Sony Corporation

Interchangeable Lens Digital Camera
ILCE-7SM3 α7SIII

Connecting the camera and a smartphone using the SSID and password

Connect your smartphone to the camera using the SSID and password if you cannot connect using NFC or the QR code. You can connect to the camera with the same operation on any Android smartphone, iPhone, or iPad.

To connect the camera and your smartphone, Imaging Edge Mobile is required. Download and install the application Imaging Edge Mobile from your smartphone's application store. If Imaging Edge Mobile is already installed on your smartphone, be sure to update it to the latest version. For details on Imaging Edge Mobile, refer to the support page (https://www.sony.net/iem/).

1 Display the QR code screen on the camera.

When using a smartphone as a remote controller:
MENU → (Network) → [Transfer/Remote] → [Ctrl w/ Smartphone] → Perform the following operations.

- Set [Ctrl w/ Smartphone] to [On].
- Execute [Connection].

When transferring images to your smartphone:
MENU → (Network) → [Transfer/Remote] → [Send to Smartphone] → Select images to transfer.

2 Press the (Delete) button on the camera to switch to the SSID and password screen.

3 Launch Imaging Edge Mobile on your smartphone, and select [Connect with a new camera] → [Connect using the camera SSID/password].

4 Input the password that is displayed on the camera.

The smartphone is connected to the camera.

Note

- Radio wave interference may occur as Bluetooth communications and Wi-Fi (2.4 GHz) communications use the same frequency band. If your Wi-Fi connection is unstable, it may be improved by turning off the Bluetooth function of the smartphone. If you do this, the location information link function is not available.

Related Topic

- Functions available with a smartphone (Imaging Edge Mobile)

- Ctrl w/ Smartphone
- Send to Smartphone

5-021-326-12(1) Copyright 2020 Sony Corporation

Interchangeable Lens Digital Camera
ILCE-7SM3 α7SIII

One-touch connection with NFC

You can connect the camera to an NFC-enabled smartphone by touching them together.

To connect the camera and your smartphone, Imaging Edge Mobile is required. Download and install the application Imaging Edge Mobile from your smartphone's application store. If Imaging Edge Mobile is already installed on your smartphone, be sure to update it to the latest version. For details on Imaging Edge Mobile, refer to the support page (https://www.sony.net/iem/).

1. **Activate the NFC function of the smartphone.**
   - On an iPhone, launch Imaging Edge Mobile, and then select [Connect with a new camera] → [Connect with the camera through One-touch (NFC)] to activate the NFC function.

2. **Prepare the camera.**

   When using your smartphone as a remote controller:
   Set MENU → (Network) → [Transfer/Remote] → [Ctrl w/ Smartphone] → [Ctrl w/ Smartphone] → [On], and set the camera to the shooting screen.

   When transferring images to your smartphone:
   Set the camera to the playback screen, and display the image you want to transfer.

3. **Keep touching the smartphone to the camera for 1 to 2 seconds.**

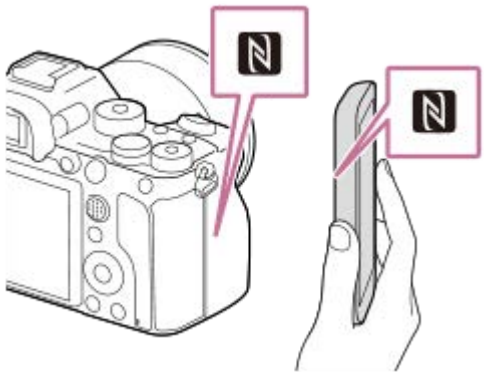

   The smartphone and the camera are connected.

About "NFC"
NFC is a technology that enables short-range wireless communication between various devices, such as mobile phones or IC tags, etc. NFC makes data communication simpler with just a touch on the designated touch-point.

- NFC (Near Field Communication) is an international standard of short-range wireless communication technology.

Note

- If you cannot make a connection, do as the following:
  - Launch Imaging Edge Mobile on your smartphone, and then move the smartphone slowly toward the (N-Mark) of this camera.
  - If the camera or smartphone is in a case, remove it.
  - Check whether the NFC function is activated on your smartphone.

- Radio wave interference may occur as Bluetooth communications and Wi-Fi (2.4 GHz) communications use the same frequency band. If your Wi-Fi connection is unstable, it may be improved by turning off the Bluetooth function of the smartphone. If you do this, the location information link function is not available.
- When [Airplane Mode] is set to [On], you cannot connect this product and the smartphone. Set [Airplane Mode] to [Off].

Related Topic

- Functions available with a smartphone (Imaging Edge Mobile)
- Ctrl w/ Smartphone
- Send to Smartphone
- Connecting the camera and a smartphone using the QR Code
- Connecting the camera and a smartphone using the SSID and password
- Airplane Mode

5-021-326-12(1) Copyright 2020 Sony Corporation

Interchangeable Lens Digital Camera
ILCE-7SM3 α7SIII

Using a smartphone as a remote commander

With Imaging Edge Mobile, you can shoot images while checking the shooting range of the camera on the screen of the smartphone. Connect the camera and smartphone by referring to "Related Topic" at the bottom of this page. For details on functions that can be operated from a smartphone, see the Imaging Edge Mobile support page:
https://www.sony.net/iem/

Related Topic

- Connecting the camera and a smartphone using the QR Code
- Connecting the camera and a smartphone using the SSID and password
- One-touch connection with NFC

5-021-326-12(1) Copyright 2020 Sony Corporation

Interchangeable Lens Digital Camera
ILCE-7SM3 α7SIII

Send to Smartphone

With Imaging Edge Mobile, you can transfer still images, XAVC S movies, slow-motion movies, or quick-motion movies to a smartphone and view them.

1. **Display the image that you want to transfer on the playback screen.**

2. **MENU → (Network) → [Transfer/Remote] → [Send to Smartphone] → [Select on This Device] → Select [This Image].**

   The QR code is displayed on the monitor of the camera.

   - You can also display the [Select on This Device] setting screen by pressing the (Send to Smartphone) button.

3. **Launch Imaging Edge Mobile on your smartphone, and select [Connect with a new camera].**

4. **Scan the camera’s QR code with your smartphone while displaying the [Connect using the camera QR Code] screen on the smartphone.**

   Once the QR code is read, [Connect with the camera?] will appear on the smartphone.

5. **Select [OK] on the smartphone.**

   The camera and your smartphone will be connected, and the image will be transferred.
   - You can transfer multiple images at once by selecting a setting other than [This Image] in [Select on This Device].

Menu item details

Select on This Device:
On the camera's monitor, select an image to be transferred to the smartphone.
(1) Select from among [This Image], [All Images in This Group], [All with this date] or [Multiple Images].

- The options displayed may differ depending on the View Mode selected on the camera.

(2) If you select [Multiple Images], select the desired images using the center of the control wheel, then press MENU → [Enter].
Select on Smartphone:
Displays all images recorded on the camera’s memory card on the smartphone.

Hint

- For connection methods other than using the QR code, refer to “Related Topic” at the bottom of this page.

Note

- You can select an image size to be sent to the smartphone from [Original], [2M] or [VGA].
  To change the image size, refer to the following steps.
  - For Android smartphone
    Start Imaging Edge Mobile, and change the image size by [Settings] → [Copy Image Size].
  - For iPhone/iPad
    Select Imaging Edge Mobile in the setting menu, and change the image size by [Copy Image Size].
- RAW images are converted to JPEG format when they are sent.
- Depending on the smartphone, the transferred movie may not be played back correctly. For example, the movie may not play smoothly, or there may be no sound.
- Depending on the format of the still image, movie, slow-motion movie, or quick-motion movie, it may not be possible to play it back on a smartphone.
- This product shares the connection information for [Send to Smartphone] with a device that has permission to connect. If you want to change the device that is permitted to connect to the product, reset the connection information by following these steps. MENU → (Network) → [Wi-Fi] → [SSID/PW Reset]. After resetting the connection information, you must register the smartphone again.
- When [Airplane Mode] is set to [On], you cannot connect this product and the smartphone. Set [Airplane Mode] to [Off].

Related Topic

- Functions available with a smartphone (Imaging Edge Mobile)
- Connecting the camera and a smartphone using the QR Code
- Connecting the camera and a smartphone using the SSID and password
- One-touch connection with NFC
- Sending Target (proxy movies)
- Airplane Mode

5-021-326-12(1) Copyright 2020 Sony Corporation

Interchangeable Lens Digital Camera
ILCE-7SM3 α7SIII

Sending Target (proxy movies)

When transferring a movie to a smartphone with [Send to Smartphone], you can set whether to transfer the low-bit-rate proxy movie or the high-bit-rate original movie.

1 **MENU → (Network) → [Transfer/Remote] → [Px Sending Target] → desired setting.**

Menu item details

Proxy Only:
Transfers only proxy movies.
Original Only:
Transfers only original movies.
Proxy & Original:
Transfers both proxy and original movies.

Related Topic

- Send to Smartphone
- Proxy Settings

5-021-326-12(1) Copyright 2020 Sony Corporation

Interchangeable Lens Digital Camera
ILCE-7SM3 α7SIII

Cnct. during Power OFF

Sets whether or not to accept Bluetooth connections from a smartphone while the camera is turned off. When [Cnct. during Power OFF] is set to [On], you can browse images on the camera's memory card and transfer images from the camera to a smartphone by operating the smartphone.

1. **MENU → (Network) → [Transfer/Remote] → [Cnct. during Power OFF] → desired setting.**

Menu Item Details

On :
Accepts Bluetooth connections from a smartphone while the camera is turned off.
The battery level is depleted gradually while the camera is turned off. If you do not want to use [Cnct. during Power OFF], turn it off.
Off :
Does not accept Bluetooth connections from a smartphone while the camera is turned off.

How to browse/transfer images on the smartphone

Advance Preparation

1. Select MENU → (Network) → [Bluetooth] → [Bluetooth Function] → [On] on the camera.
2. MENU → (Network) → [Transfer/Remote] → [Cnct. during Power OFF] → [On].
3. Select MENU → (Network) → [Bluetooth] → [Pairing] on the camera to display the screen for pairing.
4. Launch Imaging Edge Mobile on the smartphone, and then select the camera to be paired on the [Camera Remote Power ON/OFF] screen.

Operations

1. Turn off the camera.
2. Select [Camera Remote Power ON/OFF] in Imaging Edge Mobile.
3. Select the camera on the [Remote Power ON/OFF] screen to turn on the camera.
   - When the power turns on, the power mark turns green.
   - The images saved on the memory card of the camera can be viewed and are ready to be transferred.

Note

- If the smartphone is not operated for a certain period of time, the Bluetooth connection will become deactivated. Select [Camera Remote Power ON/OFF] again on the smartphone.
- When the camera is turned on, the camera will switch to the shooting screen, and the connection with the smartphone will be terminated.

Related Topic

- Functions available with a smartphone (Imaging Edge Mobile)
- Send to Smartphone
- Bluetooth Settings

5-021-326-12(1) Copyright 2020 Sony Corporation

Interchangeable Lens Digital Camera
ILCE-7SM3 α7SIII

Location Information

You can use the application Imaging Edge Mobile to obtain location information from a smartphone that is connected with your camera using Bluetooth communication. You can record the obtained location information when shooting images.

Preparation in advance

To use the location information linking function of the camera, the application Imaging Edge Mobile is required.
If “Location Information Linkage” is not displayed on the top page of Imaging Edge Mobile, you need to perform the following steps beforehand.

1. Install Imaging Edge Mobile on your smartphone.
   - You can install Imaging Edge Mobile from the application store of your smartphone. If you have already installed the application, update it to the latest version.
2. Transfer a pre-recorded image to your smartphone using the [Send to Smartphone] function of the camera.
   - After you transfer an image recorded using the camera to your smartphone, “Location Information Linkage” will appear on the top page of the application.

Operating procedure

: Operations performed on the smartphone
: Operations performed on the camera

1. : Confirm that the Bluetooth function of your smartphone is activated.
   - Do not perform the Bluetooth pairing operation on the smartphone setting screen. In steps 2 to 7, the pairing operation is performed using the camera and the application Imaging Edge Mobile.
   - If you accidentally perform the pairing operation on the smartphone setting screen in step 1, cancel the pairing and then perform the pairing operation by following Steps 2 through 7 using the camera and the application Imaging Edge Mobile.
2. : On the camera, select MENU → (Network) → [Bluetooth] → [Bluetooth Function] → [On].
3. : On the camera, select MENU → (Network) → [Bluetooth] → [Pairing].
4. : Launch Imaging Edge Mobile on your smartphone and tap “Location Information Linkage.”
   - If “Location Information Linkage” is not displayed, follow the steps in “Preparation in advance” above.
5. : Activate [Location Information Linkage] on the [Location Information Linkage] setting screen of Imaging Edge Mobile.
6. : Follow the instructions on the [Location Information Linkage] setting screen of Imaging Edge Mobile, and then select your camera from the list.
7. : Select [OK] when a message is displayed on the monitor of the camera.
   - Pairing of the camera and Imaging Edge Mobile is complete.

8. : On the camera, select MENU → (Network) → [Location Information] → [Location Info Link] → [On].

- (obtaining location information icon) will be displayed on the monitor of the camera. Location information obtained by your smartphone using GPS, etc., will be recorded when shooting images.

Menu item details

Location Info Link:
Sets whether to obtain the location information by linking with a smartphone.

Auto Time Correction:
Sets whether to automatically correct the date and time setting of the camera using information from a linked smartphone.

Auto Area Adjustment:
Sets whether to automatically correct the area setting of the camera using information from a linked smartphone.

Icons displayed when obtaining the location information

(Obtaining location information): The camera is obtaining the location information.
(Location information cannot be obtained): The camera cannot obtain the location information.
(Bluetooth connection available): Bluetooth connection with the smartphone is established.
(Bluetooth connection unavailable): Bluetooth connection with the smartphone is not established.

Hint

- Location information can be linked when Imaging Edge Mobile is running on your smartphone even if the smartphone monitor is off. However, if the camera has been turned off for a while, location information may not be linked immediately when you turn the camera back on. In this case, location information will be linked immediately if you open the Imaging Edge Mobile screen on the smartphone.
- When Imaging Edge Mobile is not operating, such as when the smartphone is restarted, launch Imaging Edge Mobile to resume location information linking.
- If the location information linking function does not work properly, see the following notes and perform pairing again.
  - Confirm that the Bluetooth function of your smartphone is activated.
  - Confirm that the camera is not connected with other devices using the Bluetooth function.
  - Confirm that [Airplane Mode] for the camera is set to [Off].
  - Delete the pairing information for the camera registered in Imaging Edge Mobile.
  - Execute [Reset Network Set.] of the camera.
- For more detailed instructions, refer to the following support page.
  https://www.sony.net/iem/btg/

Note

- When you initialize the camera, the pairing information is also deleted. Before performing pairing again, first delete the pairing information for the camera registered in the smartphone's Bluetooth settings and Imaging Edge Mobile.
- The location information will not be recorded when it cannot be obtained, such as when the Bluetooth connection is disconnected.
- The camera can be paired with up to 15 Bluetooth devices, but can link the location information with that of only one smartphone. If you want to link the location information with that of another smartphone, turn off the [Location Information Linkage] function of the smartphone that is already linked.
- If the Bluetooth connection is unstable, remove any obstacles, such as people or metal objects from between the camera and the paired smartphone.
- When pairing the camera and your smartphone, be sure to use the [Location Information Linkage] menu on Imaging Edge Mobile.
- To use the location information linkage function, set [Bluetooth Rmt Ctrl] to [Off].
- The communication distance for Bluetooth or Wi-Fi may vary depending on the conditions of use.

Supported smartphones

Refer to the support page for the latest information.
https://www.sony.net/iem/

- For details on Bluetooth versions compatible with your smartphone, check the product website for your smartphone.

Related Topic

- Functions available with a smartphone (Imaging Edge Mobile)
- Send to Smartphone
- Bluetooth Settings
- Bluetooth Rmt Ctrl

5-021-326-12(1) Copyright 2020 Sony Corporation

Interchangeable Lens Digital Camera
ILCE-7SM3 α7SIII

Recommended computer environment

You can confirm the operating computer environment of the software from the following URL:
https://www.sony.net/pcenv/

5-021-326-12(1) Copyright 2020 Sony Corporation

Interchangeable Lens Digital Camera
ILCE-7SM3 α7SIII

Connecting the camera to a computer

1. **Insert a sufficiently charged battery pack into the camera.**
2. **Turn on the camera and the computer.**
3. **(Setup) → [USB] → Set [USB Connection] to [Mass Storage].**
4. **Connect the USB Type-C terminal on the camera to the computer with a USB cable.**
   - When you connect the camera to the computer for the first time, the procedure for recognizing the camera may start automatically on the computer. Wait until the procedure is finished.
   - If you connect the camera to your computer using the USB cable when [USB Power Supply] is set to [On], power is supplied from your computer. (Default setting: [On])
   - Use the USB cable (supplied) or a USB-standard cable.
   - Use a SuperSpeed USB 5 Gbps (USB 3.2)-compatible computer and the USB cable (supplied) for higher-speed communications.

Note

- Do not turn on/off or restart the computer, or wake the computer from sleep mode when a USB connection has been established between the computer and the camera. Doing so may cause a malfunction. Before turning on/off or restarting the computer, or waking the computer from sleep mode, disconnect the camera from the computer.

Related Topic

- Sides
- USB Connection
- USB LUN Setting

5-021-326-12(1) Copyright 2020 Sony Corporation

Interchangeable Lens Digital Camera
ILCE-7SM3 α7SIII

Disconnecting the camera from the computer

Perform the following operations on the computer before disconnecting the camera from the computer.

1. **Click (Safely Remove Hardware and Eject Media) in the taskbar.**

2. **Click the displayed message.**

   The following operations are available after you have completed the steps above.
   - Disconnecting the USB cable.
   - Removing a memory card.
   - Turning off the camera.

Note

- On Mac computers, drag and drop the memory card icon or the drive icon into the “Trash” icon. The camera will be disconnected from the computer.
- On some computers, the disconnection icon may not appear. In this case, you can skip the steps above.
- Do not remove the USB cable from the camera while the access lamp is lit. The data may be damaged.

5-021-326-12(1) Copyright 2020 Sony Corporation

Introduction to computer software (Imaging Edge Desktop/Catalyst)

Imaging Edge Desktop

Imaging Edge Desktop is a software suite that includes functions such as remote shooting from a computer, and adjusting or developing RAW images recorded with the camera.

For details on how to use Imaging Edge Desktop, refer to the support page.
https://www.sony.net/disoft/help/

Installing Imaging Edge Desktop on your computer
Download and install the software by accessing the following URL:
https://www.sony.net/disoft/d/

Catalyst Browse (free software)/Prepare (paid software)

Catalyst Browse is software for previewing clips. You can preview recorded XAVC S/XAVC HS clips, view and edit media metadata, apply image stabilization* using metadata, apply color calibration, copy to the local hard drive, or transcode to a variety of formats and so on with Browse.
Catalyst Prepare adds to the functions of Browse allowing you to organize clips using bins, perform basic timeline editing with storyboards, and so on.

* For the conditions of use of the image stabilization function, refer to the support page.

Installing Catalyst Browse/Catalyst Prepare on your computer
Download and install the software by accessing the following URL:
https://www.sony.net/disoft/

5-021-326-12(1) Copyright 2020 Sony Corporation

Interchangeable Lens Digital Camera
ILCE-7SM3 α7SIII

Importing images to the computer

You can import images from the camera to a computer by connecting the camera to the computer with a USB cable, or by inserting the memory card of the camera into the computer.
Open the folder in which the images you want to import are stored on the computer, and then copy the images to the computer.

Example: Folder tree during USB Mass Storage connection

- SD card

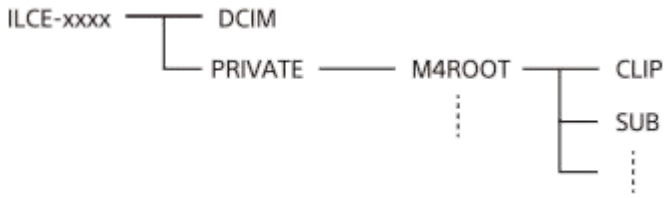

- CFexpress Type A memory card

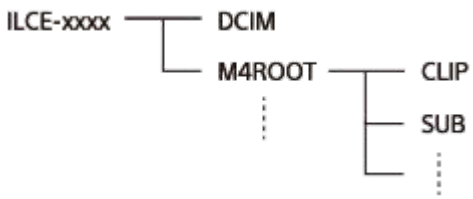

DCIM: still images
CLIP: movies
SUB: proxy movies

Note

- Do not edit or otherwise process movie files/folders from the connected computer. Movie files may be damaged or become unplayable. Do not delete movies on the memory card from the computer. Sony is not held liable for consequences resulting from such operations via the computer.
- If you delete images or perform other operations from the connected computer, the image database file may become inconsistent. In this case, repair the image database file.
- The folder tree is different during MTP connection.

5-021-326-12(1) Copyright 2020 Sony Corporation

Interchangeable Lens Digital Camera
ILCE-7SM3 α7SIII

Operating the camera from a computer (PC Remote Function)

Uses a Wi-Fi or USB connection, etc. to control the camera from a computer, including such functions as shooting and storing images on the computer.
Select MENU → (Network) → [Transfer/Remote] → [Ctrl w/ Smartphone] → [Ctrl w/ Smartphone] → [Off] beforehand.
For details on [PC Remote Function], refer to the following URL:
https://support.d-imaging.sony.co.jp/support/tutorial/ilc/ilce-7sm3/l/pcremote.php

1. **MENU → (Network) → [Transfer/Remote] → [PC Remote Function] → Select an item to set, and then select the desired setting.**

2. **Connect the camera to the computer, and then launch Imaging Edge Desktop (Remote) on the computer.**

   You can now operate the camera using Imaging Edge Desktop (Remote).

   - The connection method between the camera and the computer depends on the setting for [PC Remote Cnct Method].

Menu item details

PC Remote:
Sets whether or not to use the [PC Remote] function. ([On] / [Off])

PC Remote Cnct Method:
Selects the connection method when the camera is connected to a computer using [PC Remote]. ([USB]/[Wi-Fi Direct]/[Wi-Fi Access Point])

Pairing:
When [PC Remote Cnct Method] is set to [Wi-Fi Access Point], pair the camera with the computer.

Wi-Fi Direct Info.:
Displays the information needed to connect to the camera from the computer when [PC Remote Cnct Method] is set to [Wi-Fi Direct].

Still Img. Save Dest.:
Sets whether or not to save still images to both the camera and the computer during PC Remote shooting. ([PC Only]/[PC+Camera]/[Camera Only])

PC Save Image Size:
Selects the file size for images to be transferred to the computer when [Still Img. Save Dest.] is set to [PC+Camera]. The original-sized JPEG/HEIF file or a 2M-equivalent JPEG/HEIF file can be transferred. ([Original]/[2M])

RAW+J PC Save Img:
Selects the file type for images to be transferred to the computer when [Still Img. Save Dest.] is set to [PC+Camera]. ([RAW & JPEG]/[JPEG Only]/[RAW Only])

RAW+H PC Save Image:
Selects the file type for images to be transferred to the computer when [Still Img. Save Dest.] is set to [PC+Camera]. ([RAW & HEIF]/[HEIF Only]/[RAW Only])

How to connect the camera and the computer

When [PC Remote Cnct Method] is set to [USB]
Connect the USB Type-C terminal on the camera to the computer with a USB cable.

When [PC Remote Cnct Method] is set to [Wi-Fi Direct]
Use the camera as an access point, and connect the computer to the camera directly via Wi-Fi.
Select MENU→ (Network) → [Transfer/Remote] → [PC Remote Function] → [Wi-Fi Direct Info.] to display the Wi-Fi connection information (SSID and password) for the camera. Connect the computer and the camera using the Wi-Fi connection information displayed on the camera.

When [PC Remote Cnct Method] is set to [Wi-Fi Access Point]
Connect the camera and the computer via Wi-Fi using a wireless access point. The camera and the computer need to be paired in advance.
Select MENU→ (Network) → [Wi-Fi] → [WPS Push] or [Access Point Set.] to connect the camera to the wireless access point. Connect the computer to the same wireless access point.
Select MENU → (Network) → [Transfer/Remote] → [PC Remote Function] → [Pairing] on the camera, and then use Imaging Edge Desktop (Remote) to pair the camera and the computer. Select [OK] on the pairing confirmation screen displayed on the camera to finish pairing.

- Pairing information is deleted when you initialize the camera.

Note

- When an unrecordable memory card is inserted into the camera, you cannot record still images even if [Still Img. Save Dest.] is set to [Camera Only] or [PC+Camera].
- When [Camera Only] or [PC+Camera] is selected and no memory card is inserted into the camera, the shutter will not be released even if [Release w/o Card] is set to [Enable].
- While a still image is being played back on the camera, you cannot shoot with [PC Remote].
- [RAW+J PC Save Img] and [RAW+H PC Save Image] can be set only when [File Format] is set to [RAW & JPEG] or [RAW & HEIF].

5-021-326-12(1) Copyright 2020 Sony Corporation

Interchangeable Lens Digital Camera
ILCE-7SM3 α7SIII

Audio accessories compatible with the Multi Interface Shoe

If you shoot movies with an audio accessory (sold separately) attached to the Multi Interface Shoe of the camera, analog or digital audio will be recorded via the Multi Interface Shoe.
If you use an audio accessory that supports the digital audio interface, the sound signals will be transmitted in a digital format. This will allow you a wider range of recordable audio quality, such as the following.

- High-quality audio recording with less deterioration
- 4-channel or 24-bit audio recording

The recordable audio quality differs depending on the audio accessory. For details, refer to the instruction manual for the audio accessory.

Hint

- You can change the audio settings for audio accessories that support the digital audio interface using [Shoe Audio Set.].

Note

- Movies recorded with 24-bit audio may not be played back normally on devices or software incompatible with 24-bit audio, resulting in unexpectedly loud volumes or no sound.

Related Topic

- Shoe Audio Set.
- HDMI Output Settings (movie)
- 4ch Audio Monitoring (movie)
- Audio Out Timing
- Audio Level Display
- Audio Recording

5-021-326-12(1) Copyright 2020 Sony Corporation

Interchangeable Lens Digital Camera
ILCE-7SM3 α7SIII

Vertical grip

You can attach a vertical grip (sold separately) to this product and record vertically oriented images. When attaching the vertical grip, remove the battery cover in advance.
For details, refer to the operating instructions for the vertical grip.

To remove the battery cover

Pull the battery cover release lever **(A)** in the direction of the arrow, and then remove the battery cover.

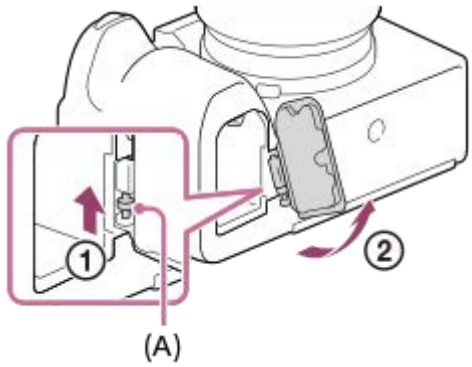

To attach the battery cover

Insert the shaft on one side of the battery cover into the attachment site, and then push in the battery cover by attaching the shaft on the opposite side.

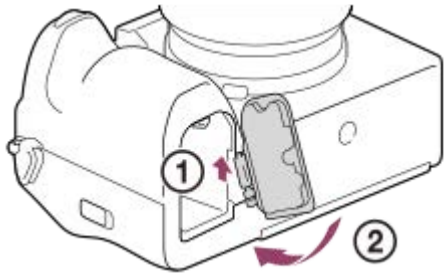

- You can attach the removed battery cover to the vertical grip so that you do not lose it.
- When a vertical grip is attached to this product, the battery remaining is displayed as 1 2 .

Note

- The LA-EA4 Mount Adaptor (sold separately) and the vertical grip are not designed to be attached at the same time. If you attach them at the same time, the space between the Mount Adaptor and the vertical grip will become narrow, making the camera difficult to hold.

5-021-326-12(1) Copyright 2020 Sony Corporation

Interchangeable Lens Digital Camera
ILCE-7SM3 α7SIII

Mount Adaptor

Using a Mount Adaptor (sold separately), you can attach an A-mount lens (sold separately) to this product.
For details, refer to the operating instructions supplied with the Mount Adaptor.

Note

- You may not be able to use the Mount Adaptor or auto-focus with certain lenses. Consult your Sony dealer or local authorized Sony service facility on compatible lenses.
- You cannot use the AF illuminator when using an A-mount lens.
- The sound of the lens and the product in operation may be recorded during movie recording.
  You can turn the sound off by selecting MENU → (Shooting) → [Audio Recording] → [Audio Recording] → [Off].
- It may take a long time or may be difficult for the product to focus, depending on the lens used or the subject.

Related Topic

- LA-EA3/LA-EA5 Mount Adaptor
- LA-EA4 Mount Adaptor

5-021-326-12(1) Copyright 2020 Sony Corporation

Interchangeable Lens Digital Camera
ILCE-7SM3 α7SIII

LA-EA3/LA-EA5 Mount Adaptor

If you use the LA-EA3 Mount Adaptor (sold separately) or LA-EA5 Mount Adaptor (sold separately), the following functions are available.

Full frame shooting:
Available with full frame shooting-compatible lenses only
Autofocus:
Available with SAM/SSM lens only
AF system:
Phase Detection AF
AF/MF select:
Can be changed using the operating switch on the lens.
Focus Mode:
Single-shot AF/Automatic AF/Continuous AF/Direct manual focus (DMF)/Manual Focus

- When using a Mount Adaptor in the movie mode, adjust the aperture value and the focus manually.

Available focus area:
[Wide]/[Zone]/[Center Fix]/[Spot]/[Expand Spot]/[Tracking]
SteadyShot:
In-body

Note

- When a setting other than [Continuous Shooting: Lo] is selected for [Cont. Shooting], the focus is locked during the first shot, even if [Focus Mode] is set to [Continuous AF].

Related Topic

- Mount Adaptor
- LA-EA4 Mount Adaptor

5-021-326-12(1) Copyright 2020 Sony Corporation

Interchangeable Lens Digital Camera
ILCE-7SM3 α7SIII

LA-EA4 Mount Adaptor

If you use the LA-EA4 Mount Adaptor (sold separately), the following functions are available.

Full size shooting:
Available with full frame shooting-compatible lenses only
Autofocus:
Not available.

- Only the manual focusing mode is supported.

SteadyShot:
In-body

Note

- The LA-EA4 Mount Adaptor (sold separately) and the vertical grip (sold separately) are not designed to be attached at the same time. If you attach them at the same time, the space between the Mount Adaptor and the vertical grip will become narrow, making the camera difficult to hold.

Related Topic

- Mount Adaptor
- LA-EA3/LA-EA5 Mount Adaptor

5-021-326-12(1) Copyright 2020 Sony Corporation

Multi Battery Adaptor Kit

You can use the Multi Battery Adaptor Kit (sold separately) with this camera to shoot for long periods. When using the Multi Battery Adaptor Kit, remove the camera's battery cover.
For details, refer also to the operating instructions supplied with the Multi Battery Adaptor Kit.

To remove the battery cover

Pull the battery cover release lever **(A)** in the direction of the arrow, and then remove the battery cover.

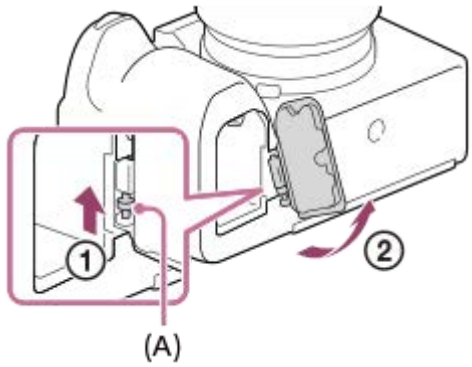

To attach the battery cover

Insert the shaft on one side of the battery cover into the attachment site, and then push in the battery cover by attaching the shaft on the opposite side.

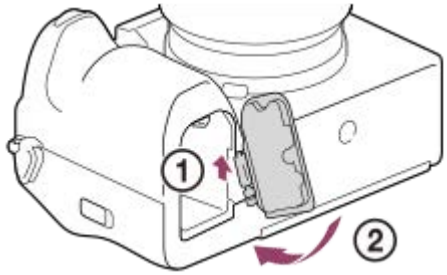

Note

- While the plug-in plate of the Multi Battery Adaptor Kit is inserted in the camera, do not slide the battery lock lever of the camera. The plug-in plate will be ejected from the camera if you do so.

5-021-326-12(1) Copyright 2020 Sony Corporation

Battery life and number of recordable images

Number of recordable images when shooting still images

Screen mode	Approx. 600 images
Viewfinder mode	Approx. 510 images

Battery life for actual movie shooting

Screen mode	Approx. 95 min.
Viewfinder mode	Approx. 80 min.

Battery life for continuous movie shooting

Screen mode	Approx. 135 min.
Viewfinder mode	Approx. 130 min.

- The above estimates for battery life and number of recordable images apply when the battery pack has been fully charged. The battery life and number of images may decrease depending on the conditions of use.
- The battery life and number of recordable images are estimates based on shooting with the default settings under the following conditions:
  - Using the battery pack at an ambient temperature of 25°C (77°F).
  - Using a Sony CFexpress Type A memory card (sold separately)
  - Using a FE 28-70mm F3.5-5.6 OSS lens (sold separately)
- The numbers of recordable still images are based on the CIPA standard and shooting under the following conditions: (CIPA: Camera & Imaging Products Association)
  - One picture is taken every 30 seconds.
  - The power is turned on and off once every ten times.
- The number of minutes for movie shooting is based on the CIPA standard and shooting under the following conditions:
  - The image quality is set to XAVC S HD 60p 50M /50p 50M 4:2:0 8bit.
  - Actual shooting (movies): Battery life based on repeated shooting, zooming, shooting stand-by, turning on/off, etc.
  - Continuous shooting (movies): No operations other than starting and ending shooting are performed.

5-021-326-12(1) Copyright 2020 Sony Corporation

Interchangeable Lens Digital Camera
ILCE-7SM3 α7SIII

Number of recordable images

When you insert a memory card into the camera and turn the camera on, the number of images that can be recorded (should you continue to shoot using the current settings) is displayed on the screen.

Note

- When “0” (the number of recordable images) flashes in orange, the memory card is full. Replace the memory card with another one, or delete images from the current memory card.
- When “NO CARD” flashes in orange, it means no memory card has been inserted. Insert a memory card.
- If the (Warning) icon or the (Malfunction) icon is displayed, there is something wrong with the memory card. Replace the memory card with another one.

The number of images that can be recorded on a memory card

The table below shows the approximate number of images that can be recorded on a memory card formatted with this camera.
The numbers shown reflect the following conditions:

- Using a Sony memory card
- [Aspect Ratio] is set to [3:2], and [JPEG Image Size]/[HEIF Image Size] is set to [L: 12M]. *1

The values may vary depending on the shooting conditions and the type of memory card used.

(Unit: images)

JPEG Quality/HEIF Quality/ File Format	SD memory card		CFexpress Type A memory card	
	64GB	128GB	80GB	160GB
JPEG Standard	15000	30000	17000	35000
JPEG Fine	11000	22000	12000	25000
JPEG Extra fine	6000	12000	7000	14000
HEIF Standard	21000	43000	25000	48000
HEIF Fine	16000	33000	19000	38000
HEIF Extra fine	12000	24000	13000	28000
RAW & JPEG (Compressed RAW)*2	2600	5300	3000	6100
RAW & HEIF (Compressed RAW)*2	2800	5700	3300	6700
RAW (Compressed RAW)	3500	7000	4100	8100
RAW & JPEG (Uncompressed RAW)*2	1600	3200	1800	3800
RAW & HEIF (Uncompressed RAW)*2	1700	3400	1900	4000
RAW (Uncompressed RAW)	1900	3800	2200	4400

*1 When [Aspect Ratio] is set to other than [3:2], you can record more images than the numbers shown in the table above. (except when [RAW] is selected)
*2 JPEG image quality when [RAW & JPEG] is selected: [Fine]
HEIF image quality when [RAW & HEIF] is selected: [Fine]

Note

- Even if the number of recordable images is higher than 9999 images, “9999” will appear.

Related Topic

- Memory cards that can be used

5-021-326-12(1) Copyright 2020 Sony Corporation

Recordable movie times

The table below shows the approximate total recording times using a memory card formatted with this camera. The values may vary depending on the shooting conditions and the type of memory card used.

(h (hour), min (minute))

File Format	Rec Frame Rate	Record Setting	SD memory card		CFexpress Type A memory card	
			64 GB	128 GB	80 GB	160 GB
XAVC HS 4K	60p/50p	200M	35 min	70 min	40 min	1 h 25 min
		150M	45 min	1 h 35 min	55 min	1 h 50 min
		100M	1 h 10 min	2 h 20 min	1 h 20 min	2 h 50 min
		75M	1 h 30 min	3 h	1 h 40 min	3 h 40 min
		45M	2 h 20 min	4 h 50 min	2 h 40 min	5 h 40 min
XAVC S 4K	60p/50p	200M	35 min	1 h 10 min	40 min	1 h 25 min
		150M	45 min	1 h 35 min	55 min	1 h 50 min
XAVC S HD	60p/50p	50M	2 h 10 min	4 h 30 min	2 h 30 min	5 h 10 min
		25M	3 h 50 min	8 h 10 min	6 h 30 min	9 h 10 min
XAVC S-I 4K	60p/50p	600M/500M	10 min	25 min	10 min	25 min
XAVC S-I HD	60p/50p	222M/185M	30 min	1 h 5 min	35 min	1 h 15 min

The recording times when [Px Proxy Recording] is set to [Off].

- The times shown are recordable times using a Sony memory card.
- The duration of time available for movie recording varies depending on the file format/recording settings for movies, memory card, ambient temperature, Wi-Fi network environment, condition of the camera before you start recording, and condition of the charging of the battery.
  The maximum continuous recording time for a single movie shooting session is approximately 13 hours (a product specification limit).

Note

- The recordable time of movies varies because the camera is equipped with VBR (Variable Bit-Rate), which automatically adjusts image quality depending on the shooting scene. When you record a fast-moving subject, the image is clearer but the recordable time is shorter because more memory is required for recording. The recordable time also varies depending on the shooting conditions, the subject or the image quality/size settings.

Notes on continuous movie recording

- High-quality movie recording and high-speed continuous shooting require large amounts of power. Therefore, if you continue to shoot, the temperature inside the camera will rise, especially that of the image sensor. In such cases, the

camera will turn off automatically because the surface of the camera is heated to a high temperature or the high temperature affects the quality of the images or the internal mechanism of the camera.

- The duration of time available for continuous movie recording when the camera records with the default settings after the power has been turned off for a while is as follows. The values indicate the continuous time from when the camera starts recording until the camera stops recording.

When [Auto Power OFF Temp.] is set to [Standard]

File Format	XAVC S HD	XAVC S 4K
Ambient temperature: 25°C (77°F)	Approx. 30 minutes	Approx. 30 minutes
Ambient temperature: 40°C (104°F)	Approx. 30 minutes	Approx. 30 minutes

When [Auto Power OFF Temp.] is set to [High]

File Format	XAVC S HD	XAVC S 4K
Ambient temperature: 25°C (77°F)	Approx. 120 minutes	Approx. 90 minutes
Ambient temperature: 40°C (104°F)	Approx. 90 minutes	Approx. 60 minutes

HD: XAVC S HD (60p 50M/50p 50M 4:2:0 8bit; when the camera is not connected via Wi-Fi; when using a CFexpress Type A memory card; when the monitor is open)
4K: XAVC S 4K (60p 150M/50p 150M 4:2:0 8bit; when the camera is not connected via Wi-Fi; when using a CFexpress Type A memory card; when the monitor is open)

- The duration of time available for movie recording varies with the temperature, file format/record setting for movies, Wi-Fi network environment, or condition of the camera before you start recording. If you frequently recompose or shoot images after the power is turned on, the temperature inside the camera will rise and the recording time available will be shorter.
- If the [!] (Overheating warning) icon appears, the temperature of the camera has risen.
- If the camera stops movie recording due to a high temperature, leave it for some time with the power turned off. Start recording after the temperature inside the camera drops fully.
- If you observe the following points, you will be able to record movies for longer periods of time.
  - Keep the camera out of direct sunlight.
  - Turn the camera off when it is not being used.

Related Topic

- Memory cards that can be used
- Battery life and number of recordable images

5-021-326-12(1) Copyright 2020 Sony Corporation

Interchangeable Lens Digital Camera
ILCE-7SM3 α7SIII

List of icons on the monitor

The displayed contents and their positions in the illustrations are just guidelines, and may differ from the actual displays. Descriptions are given below the indications of the icons.

Icons on the shooting screen

Monitor mode

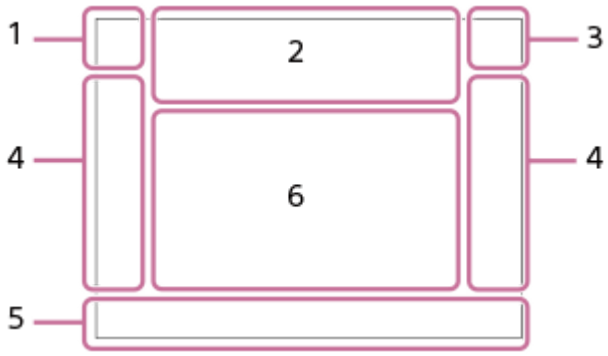

Viewfinder mode

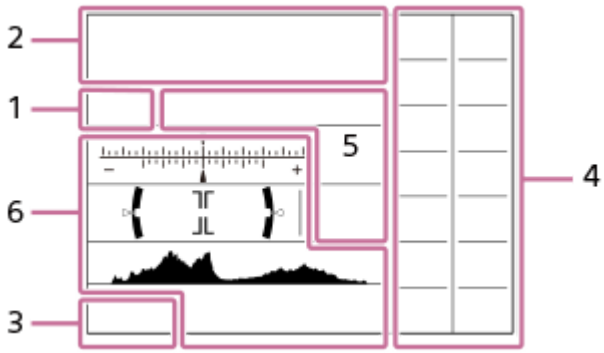

1. **Shooting mode/Scene recognition**
   P P* A S M
   Shooting mode
   1 2 3
   Register number
   Scene Recognition icons
2. **Camera settings**
   1 2 1 2 1RAW 2RAW 1RAW 2RAW 1JPEG * 2JPEG * 1JPEG * 2JPEG * 1R+J * 2R+J * 1R+J * 2R+J * NO CARD
   Memory card status
   * When shooting in the HEIF format, the HEIF icon is displayed.

   100/1h30m
   Remaining number of recordable images/Recordable time of movies
   3
   Writing data / Number of images left to write
   3:2 4:3 16:9 1:1
   Aspect ratio of still images

12M / 11M / 10M / 8.0M / 5.1M / 4.6M / 4.3M / 3.4M / 3.0M / 2.7M / 2.6M / 2.0M / 1.3M / 1.1M / 0.8M
Image size of still images

RAW RAW
RAW recording (compressed/uncompressed)

J-X.FINE J-FINE J-STD H-X.FINE H-FINE H-STD
JPEG Quality / HEIF Quality

4:2:2
HEIF color sampling

XAVC HS 4K XAVC S 4K XAVC S HD XAVC S-I 4K XAVC S-I HD
File format of movies

120p 100p 60p 50p 30p 25p 24p
Frame rate of movies

600 500 300 280 250 240 222 200 185 150 140 111 100 93
89 75 60 50 45 30 25 16
Record setting of movies

100Px 60Px 50Px 25Px 16Px
Proxy Recording

4:2:2 10bit/4:2:0 10bit/4:2:0 8bit
Color sampling and bit depth of movies

240fps 200fps 120fps 100fps 60fps 50fps 30fps 25fps 15fps 12fps 8fps 6fps 4fps 3fps 2fps 1fps
Frame rate for slow/quick motion shooting

Flash charge in progress

VIEW
Setting Effect OFF

VIEW
Exposure Effect (Exposure Setting Only)

ON
AF Illuminator

Flicker
Flickering detected

NFC active

OFF
SteadyShot off/on, Camera shake warning

8mm 8mm
SteadyShot focal length / Camera shake warning

S C D
Optical zoom only /Clear Image Zoom/Digital Zoom

PC
PC remote

Bright Monitoring

Silent mode

Remote control

FTP FTP
FTP function / FTP transfer status

Wi-Fi Wi-Fi
Connected to Wi-Fi/Disconnected from Wi-Fi

LAN LAN
Connected to LAN/Disconnected from LAN (when using a USB-LAN conversion adaptor)

OFF

No audio recording of movies

Wind Noise Reduct.

Writing copyright information [On]

Writing IPTC information [On]

Assist S-Log2 Assist S-Log3 Assist HLG 709 Assist HLG 2020

Gamma Disp. Assist Typ.

OFF

Touch function in shooting mode (Touch focus/Touch tracking/off)

Focus Cancel

Tracking Cancel

Spot Focus

Performing [Spot Focus]

Bluetooth connection available / Bluetooth connection unavailable

Connected to smartphone / Not connected to smartphone

Obtaining location information / Location information cannot be obtained

Airplane Mode

Overheating warning

FULL ERROR

Database file full / Database file error

3. **Battery**

100%

Remaining battery

Remaining battery warning

USB power supply

4. **Shooting settings**

HI+ HI MID LO 10 2s 0.3EV3 0.3EV3 0.3EV3 0.3EV3 HI Lo WB HI DRO LO

Drive Mode

AUTO SLOW REAR WL SLOW WL REAR WL

Flash Mode/Wireless Flash/Red Eye Reduction

±0.0

Flash Comp.

AF-S AF-A AF-C DMF MF

Focus Mode

Focus Area

JPEG HEIF RAW RAW RAW+J RAW+H RAW+J RAW+H

File Format

Metering Mode

AWB AWB AWB −1 0 +1 +2 7500K A5 G5

White Balance (Auto, Preset, Underwater Auto, Custom, Color temperature, Color filter)

D-R OFF DRO AUTO

D-Range Optimizer

ST PT NT VV VV2 FL IN SH BW SE

Creative Look

AF ON AF OFF

Face/Eye Prior. in AF

PP1 – PP11 PP OFF

Picture Profile

MECH ELEC

Shutter Type

1 2

Prioritize Rec. Media

5. **Focus indicator/exposure settings**

Focus indicator

1/250

Shutter speed

F3.5

Aperture value

Exposure compensation/Metered Manual

ISO400

ISO AUTO

ISO 400

ISO sensitivity

AWB L

AE lock/FEL lock/AWB lock

APS-C S35 Shooting

6. **Guides/other**

Tracking Cancel

Guide display for tracking

Focus Cancel

Guide display for canceling focusing

ISO

Control wheel function

Av Tv ISO

Guide display for My Dial

−6 −5 −4 −3 −2 −1 0 +1 +2 +3 +4

Bracket indicator

Spot metering area

Histogram

Digital level gauge

STBY REC

Movie recording standby/Movie recording in progress

1:00:12

Actual movie recording time (hours: minutes: seconds)

48khz/16bit 2ch
48khz/24bit 2ch
48khz/24bit 4ch

Audio format

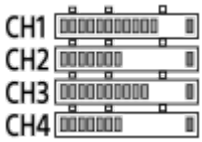

Audio Level Display

REC Control

4K/RAW external output

00:00:00.00

Time code (hours: minutes: seconds: frames)

00 00 00 00

User Bit

Icons on the playback screen

Single-image playback

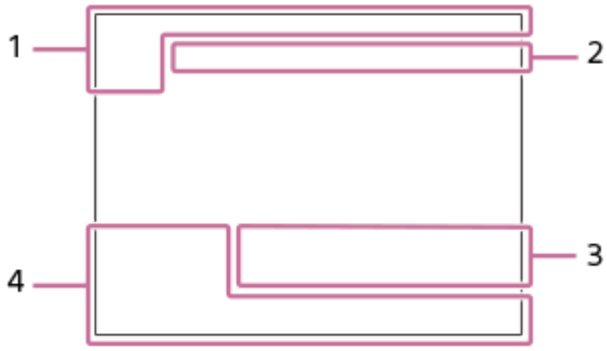

Histogram display

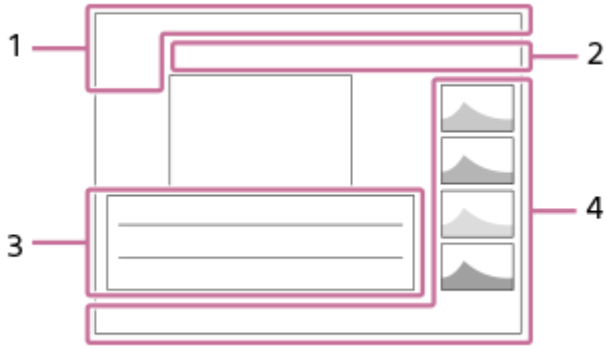

1. **Basic information**

Playback media

View Mode

IPTC Information

Rating

Protect

3/7

File number/Number of images in the view mode

NFC active

Remaining battery

Display as Group

Proxy movie included

FTP transfer status

2. **Camera settings**

   Refer to “Icons on the shooting screen.”

3. **Shooting settings**

   35mm

   Lens focal length

   HLG

   HDR recording (Hybrid Log-Gamma)

   Copyright information exists for image

   Refer to “Icons on the shooting screen” for other icons displayed in this area.

4. **Image information**

   Latitude/longitude information

   2020-1-1 10:37:00PM

   Date of recording

   100-0003

   Folder number - file number

   C0003

   Movie file number

   Histogram (Luminance/R/G/B)

5-021-326-12(1) Copyright 2020 Sony Corporation

Interchangeable Lens Digital Camera
ILCE-7SM3 α7SIII

List of default setting values

The default setting values for each menu item at the time of purchase are shown in the following table.
The content of the menu displayed on the screen differs depending on the position of the mode dial. For details, refer to “Finding functions from MENU.”

To reset settings to the default values

Select MENU → (Setup) → [Reset/Save Settings] → [Setting Reset] → [Camera Settings Reset] or [Initialize] → [Enter].
The items that can be reset using [Camera Settings Reset] are limited. See the following tables. If you select [Initialize], all the settings of the camera will be reset to the default values.

(Shooting)

MENU items	Default setting value	Resettable using [Camera Settings Reset]
JPEG/HEIF Switch	JPEG	✓
File Format	JPEG/HEIF	✓
RAW File Type	Compressed	✓
JPEG Quality/HEIF Quality	Fine	✓
JPEG Image Size/HEIF Image Size (when [Aspect Ratio] is set to [3:2])	L: 12M	✓
JPEG Image Size/HEIF Image Size (when [Aspect Ratio] is set to [4:3])	L: 11M	✓
JPEG Image Size/HEIF Image Size (when [Aspect Ratio] is set to [16:9])	L: 10M	✓
JPEG Image Size/HEIF Image Size (when [Aspect Ratio] is set to [1:1])	L: 8.0M	✓
JPEG Image Size/HEIF Image Size (when [Aspect Ratio] is set to [3:2] recording in the APS-C-equivalent size)	L: 5.1M	✓
JPEG Image Size/HEIF Image Size (when [Aspect Ratio] is set to [16:9] recording in the APS-C-equivalent size)	L: 4.3M	✓
JPEG Image Size/HEIF Image Size (when [Aspect Ratio] is set to [1:1] recording in the APS-C-equivalent size)	L: 3.4M	✓
JPEG Image Size/HEIF Image Size (when [Aspect Ratio] is set to [4:3] recording in the APS-C-equivalent size)	L: 4.6M	✓
Aspect Ratio	3:2	✓
File Format	XAVC S HD	✓
Movie Settings (Rec Frame Rate)	60p/50p	✓
Movie Settings (Record Setting) (when [File Format] is set to [XAVC HS 4K], and [Rec Frame Rate] is set to [60p]/[50p])	45M 4:2:0 10bit	✓
Movie Settings (Record Setting) (when [File Format] is set to [XAVC HS 4K], and [Rec Frame Rate] is set to [24p])	50M 4:2:0 10bit	✓

MENU items	Default setting value	Resettable using [Camera Settings Reset]
Movie Settings (Record Setting) (when [File Format] is set to [XAVC HS 4K], and [Rec Frame Rate] is set to [120p]/[100p])	200M 4:2:0 10bit	✓
Movie Settings (Record Setting) (when [File Format] is set to [XAVC S 4K], and [Rec Frame Rate] is set to [60p]/[50p])	150M 4:2:0 8bit	✓
Movie Settings (Record Setting) (when [File Format] is set to [XAVC S 4K], and[Rec Frame Rate] is set to [30p]/[25p])	60M 4:2:0 8bit	✓
Movie Settings (Record Setting) (when [File Format] is set to [XAVC S 4K], and [Rec Frame Rate] is set to [24p])	60M 4:2:0 8bit	✓
Movie Settings (Record Setting) (when [File Format] is set to [XAVC S 4K], and [Rec Frame Rate] is set to [120p]/[100p])	200M 4:2:0 8bit	✓
Movie Settings (Record Setting) ([File Format] is set to [XAVC S HD], and [Rec Frame Rate] is set to [60p]/[50p])	50M 4:2:0 8bit	✓
Movie Settings (Record Setting) (when [File Format] is set to [XAVC S HD], and [Rec Frame Rate] is set to [30p]/[25p])	50M 4:2:0 8bit	✓
Movie Settings (Record Setting) (when [File Format] is set to [XAVC S HD], and [Rec Frame Rate] is set to [24p])	50M 4:2:0 8bit	✓
Movie Settings (Record Setting) (when [File Format] is set to [XAVC S HD], and [Rec Frame Rate] is set to [120p]/[100p])	60M 4:2:0 8bit	✓
Movie Settings (Record Setting) (when [File Format] is set to [XAVC S-I 4K], and [Rec Frame Rate] is set to [60p]/[50p])	600M 4:2:2 10bit/500M 4:2:2 10bit	✓
Movie Settings (Record Setting) (when [File Format] is set to [XAVC S-I 4K], and [Rec Frame Rate] is set to [30p]/[25p])	300M 4:2:2 10bit/250M 4:2:2 10bit	✓
Movie Settings (Record Setting) (when [File Format] is set to [XAVC S-I 4K], and [Rec Frame Rate] is set to [24p])	240M 4:2:2 10bit	✓
Movie Settings (Record Setting) (when [File Format] is set to [XAVC S-I HD], and [Rec Frame Rate] is set to [60p]/[50p])	222M 4:2:2 10bit/185M 4:2:2 10bit	✓
Movie Settings (Record Setting) (when [File Format] is set to [XAVC S-I HD], and [Rec Frame Rate] is set to [30p]/[25p])	111M 4:2:2 10bit/93M 4:2:2 10bit	✓
Movie Settings (Record Setting) (when [File Format] is set to [XAVC S-I HD], and [Rec Frame Rate] is set to [24p])	89M 4:2:2 10bit	✓
S&Q S&Q Settings (S&Q Rec Frame Rate)	60p/50p	✓
S&Q S&Q Settings (S&Q Frame Rate)	60fps/50fps	✓
S&Q S&Q Settings (S&Q Record Setting) (when [File Format] is set to [XAVC HS 4K], and [Rec Frame Rate] is set to [60p]/[50p])	45M 4:2:0 10bit	✓
S&Q S&Q Settings (S&Q Record Setting) (when [File Format] is set to [XAVC HS 4K], and [Rec Frame Rate] is set to [24p])	50M 4:2:0 10bit	✓
S&Q S&Q Settings (S&Q Record Setting) (when [File Format] is set to [XAVC HS 4K], and [Rec Frame Rate] is set to [120p]/[100p])	200M 4:2:0 10bit	✓

MENU items	Default setting value	Resettable using [Camera Settings Reset]
S&Q S&Q Settings (S&Q Record Setting) (when [File Format] is set to [XAVC S 4K], and [Rec Frame Rate] is set to [60p]/[50p])	150M 4:2:0 8bit	✓
S&Q S&Q Settings (S&Q Record Setting) (when [File Format] is set to [XAVC S 4K], and [Rec Frame Rate] is set to [30p]/[25p])	60M 4:2:0 8bit	✓
S&Q S&Q Settings (S&Q Record Setting) (when [File Format] is set to [XAVC S 4K], and [Rec Frame Rate] is set to [24p])	60M 4:2:0 8bit	✓
S&Q S&Q Settings (S&Q Record Setting) (when [File Format] is set to [XAVC S 4K], and [Rec Frame Rate] is set to [120p]/[100p])	200M 4:2:0 8bit	✓
S&Q S&Q Settings (S&Q Record Setting) (when [File Format] is set to [XAVC S HD], and [Rec Frame Rate] is set to [60p]/[50p])	50M 4:2:0 8bit	✓
S&Q S&Q Settings (S&Q Record Setting) (when [File Format] is set to [XAVC S HD], and [Rec Frame Rate] is set to [30p]/[25p])	50M 4:2:0 8bit	✓
S&Q S&Q Settings (S&Q Record Setting) (when [File Format] is set to [XAVC S HD], and [Rec Frame Rate] is set to [24p])	50M 4:2:0 8bit	✓
S&Q S&Q Settings (S&Q Record Setting) (when [File Format] is set to [XAVC S HD], and [Rec Frame Rate] is set to [120p]/[100p])	60M 4:2:0 8bit	✓
S&Q S&Q Settings (S&Q Record Setting) (when [File Format] is set to [XAVC S-I 4K], and [Rec Frame Rate] is set to [60p]/[50p])	600M 4:2:2 10bit/500M 4:2:2 10bit	✓
S&Q S&Q Settings (S&Q Record Setting) (when [File Format] is set to [XAVC S-I 4K], and [Rec Frame Rate] is set to [30p]/[25p])	300M 4:2:2 10bit/250M 4:2:2 10bit	✓
S&Q S&Q Settings (S&Q Record Setting) (when [File Format] is set to [XAVC S-I 4K], and [Rec Frame Rate] is set to [24p])	240M 4:2:2 10bit	✓
S&Q S&Q Settings (S&Q Record Setting) (when [File Format] is set to [XAVC S-I HD], and [Rec Frame Rate] is set to [60p]/[50p])	222M 4:2:2 10bit/185M 4:2:2 10bit	✓
S&Q S&Q Settings (S&Q Record Setting) (when [File Format] is set to [XAVC S-I HD], and [Rec Frame Rate] is set to [30p]/[25p])	111M 4:2:2 10bit/93M 4:2:2 10bit	✓
S&Q S&Q Settings (S&Q Record Setting) (when [File Format] is set to [XAVC S-I HD], and [Rec Frame Rate] is set to [24p])	89M 4:2:2 10bit	✓
Px Proxy Settings (Px Proxy Recording)	Off	✓
Px Proxy Settings (Px Proxy File Format)	XAVC S HD	✓
Px Proxy Settings (Px Proxy Rec. Settings) (when [Px Proxy File Format] is set to [XAVC HS HD])	9M 4:2:0 10bit	✓
Px Proxy Settings (Px Proxy Rec. Settings) (when [Px Proxy File Format] is set to [XAVC S HD])	6M 4:2:0 8bit	✓
APS-C S35 Shooting	Auto	—
Long Exposure NR	On	✓
High ISO NR	Normal	✓

MENU items	Default setting value	Resettable using [Camera Settings Reset]
HLG Still Image	Off	✓
Color Space	sRGB	✓
Lens Compensation (Shading Comp.)	Auto	—
Lens Compensation (Chromatic Aberration Comp.)	Auto	—
Lens Compensation (Distortion Comp.)	Off	—
Format	—	—
Rec. Media Settings (Prioritize Rec. Media)	Slot 1	—
Rec. Media Settings (Recording Mode)	Standard	—
Rec. Media Settings (Auto Switch Media)	Off	—
Recover Image DB* * This item is not reset even if you select [Camera Settings Reset] or [Initialize].	—	—
Display Media Info.	—	—
File/Folder Settings (File Number)	Series	—
File/Folder Settings (Set File Name)	DSC	—
File/Folder Settings (Folder Name)	Standard Form	—
Select REC Folder	—	—
Create New Folder	—	—
IPTC Information (Write IPTC Info)	Off	—
IPTC Information (Register IPTC Info)	—	—
Copyright Info (Write Copyright Info)	Off	—
Copyright Info (Set Photographer)	—	—
Copyright Info (Set Copyright)	—	—
Copyright Info (Disp. Copyright Info)	—	—
Write Serial Number	Off	—
File Settings (File Number)	Series	—
File Settings (Series Counter Reset)	—	—
File Settings (File Name Format)	Standard	—
File Settings (Title Name Settings)	—	—
Exposure Mode	Manual Exposure	✓
S&Q Exposure Mode	Manual Exposure	✓
Exposure Ctrl Type	P/A/S/M Mode	—

MENU items	Default setting value	Resettable using [Camera Settings Reset]
MR Recall Camera Setting	—	—
MR Camera Set. Memory	—	—
MR Memory/Recall Media	Slot 1	✓
Reg. Custom Shoot Set	Recall Custom hold 1	—
Drive Mode	Single Shooting	✓
Bracket Settings (Selftimer during Bracket)	Off	✓
Bracket Settings (Bracket order)	0→-→+	✓
Interval Shoot Func. (Interval Shooting)	Off	✓
Interval Shoot Func. (Shooting Start Time)	1 Sec	✓
Interval Shoot Func. (Shooting Interval)	3 Sec	✓
Interval Shoot Func. (Number of Shots)	30	✓
Interval Shoot Func. (AE Tracking Sensitivity)	Mid	✓
Interval Shoot Func. (Shutter Type in Interval)	Electronic Shutter	✓
Interval Shoot Func. (Shoot Interval Priority)	Off	✓
Silent Mode Settings (Silent Mode)	Off	✓
Silent Mode Settings (when [Target Function Settings] is set to [Aperture Drive in AF])	Standard	✓
Silent Mode Settings (when [Target Function Settings] is set to [Auto Pixel Mapping])	Off	✓
Shutter Type	Mechanical Shutter	✓
e-Front Curtain Shut.	On	—
Release w/o Lens	Enable	—
Release w/o Card	Enable	—
Anti-flicker Shoot.	Off	✓
Audio Recording	On	✓
Audio Rec Level	26	✓
Audio Out Timing	Live	✓
Wind Noise Reduct.	Off	✓
Shoe Audio Set.	48khz/16bit 2ch	✓
Audio Level Display	On	—
Time Code Preset	00:00:00.00	—

MENU items	Default setting value	Resettable using [Camera Settings Reset]
User Bit Preset	00 00 00 00	—
Time Code Format	DF	—
Time Code Run	Rec Run	—
Time Code Make	Preset	—
User Bit Time Rec	Off	—
SteadyShot	On	✓
SteadyShot	Standard	✓
SteadyShot Adjust.	Auto	✓
Focal Length (when [SteadyShot Adjust.] is set to [Manual])	8mm	✓
Zoom	—	—
Zoom Range	Optical zoom only	—
Zoom Speed (Fixed Speed STBY)	3	✓
Zoom Speed (Fixed Speed REC)	3	✓
Zoom Speed (Speed Type)	Variable	✓
Zoom Speed (Fixed Speed STBY)	3	✓
Zoom Speed (Fixed Speed REC)	3	✓
Grid Line Display	Off	—
Grid Line Type	Rule of 3rds Grid	—
Live View Display Set. (Live View Display)	Setting Effect ON	—
Live View Display Set. (Exposure Effect)	Exposure Set. & flash	—
Live View Display Set. (Frame Rate Low Limit)	Off	✓
Emph disp dur REC	Off	✓
Marker Display	Off	—
Center Marker	Off	—
Aspect Marker	Off	—
Safety Zone	Off	—
Guideframe	Off	—

(Exposure/Color)

MENU items	Default setting value	Resettable using [Camera Settings Reset]

MENU items	Default setting value	Resettable using [Camera Settings Reset]
Auto Slow Shutter	On	✓
ISO	ISO AUTO	✓
ISO Range Limit	—	—
ISO AUTO Min. SS	Standard	✓
Auto/Manual Swt. Set. (Av Auto/Manual Switch)	Manual	✓
Auto/Manual Swt. Set. (Tv Auto/Manual Switch)	Manual	✓
Exposure Comp.	±0.0	✓
Reset EV Comp.	Reset	—
Exposure step	0.3EV	—
Exposure Std. Adjust (Multi)	±0	—
Exposure Std. Adjust (Center)	±0	—
Exposure Std. Adjust (Spot)	±0	—
Exposure Std. Adjust (Entire Screen Average)	±0	—
Exposure Std. Adjust (Highlight)	±0	—
Metering Mode	Multi	✓
Face Priority in Multi Metering	On	✓
Spot Metering Point	Center	✓
AEL w/ Shutter	Auto	—
Flash Mode	Autoflash	✓
Flash Comp.	±0.0	✓
Exp.comp.set	Ambient&flash	—
Wireless Flash	Off	✓
Red Eye Reduction	Off	✓
External Flash Set. (Ext. Flash Firing Set.)	—	✓
External Flash Set. (Ext. Flash Cust. Set.)	—	✓
White Balance	Auto	✓
Priority Set in AWB	Standard	✓
Shutter AWB Lock	Off	—
Shockless WB	1 (Fast)	✓
D-Range Optimizer	D-Range Optimizer: Auto	✓
Creative Look	ST	✓
Picture Profile	Off	✓

MENU items	Default setting value	Resettable using [Camera Settings Reset]
Zebra Display	Off	—
Zebra Level	70	—

AF/MF (Focus)

MENU items	Default setting value	Resettable using [Camera Settings Reset]
Focus Mode	Automatic AF	✓
Priority Set in AF-S	Balanced Emphasis	—
Priority Set in AF-C	Balanced Emphasis	—
AF Tracking Sensitivity	3(Standard)	✓
AF Illuminator	Auto	✓
Aperture Drive in AF	Standard	—
AF w/ Shutter	On	—
Pre-AF	Off	—
AF Transition Speed	5	✓
AF Subj. Shift Sensitivity	5(Responsive)	✓
Focus Area	Wide	✓
Focus Area Limit	Wide	✓
Switch V/H AF Area	Off	✓
Focus Area Color	White	—
AF Area Registration	Off	—
Del. Regist. AF Area	—	—
AF Area Auto Clear	Off	—
AF-C Area Display	On	—
Phase Detect. Area	Off	—
Circ. of Focus Point	Does Not Circulate	—
AF Frame Move Amt	Standard	✓
Face/Eye Prior. in AF	On	✓
Face/Eye Subject	Human	✓
Right/Left Eye Select	Auto	✓
Face/Eye Frame Disp.	Off	✓
Face Memory	—	—
Regist. Faces Priority	On	✓
Auto Magnifier in MF	On	—

MENU items	Default setting value	Resettable using [Camera Settings Reset]
Focus Magnifier	—	✓
Focus Magnif. Time	No Limit	—
Initial Focus Mag.	x1.0	—
AF in Focus Mag.	On	—
Initial Focus Mag.	x1.0	—
Peaking Display	Off	—
Peaking Level	Mid	—
Peaking Color	White	—

(Playback)

To reset the items for [Playback] to the default values, select [Initialize]. These items are not reset to the default values even if you select [Camera Settings Reset].

MENU items	Default setting value
Select Playback Media	—
View Mode	Date View
Enlarge Image	—
Enlarge Initial Mag.	Standard. Mag.
Enlarge Initial Position	Focused Position
Protect	—
Rating	—
Rating Set(Custom Key)	—
Delete	—
Delete confirm.	"Cancel" first
Rotate	—
Copy	—
Photo Capture	—
JPEG/HEIF Switch	JPEG
Cont. Play for Interval	—
Play Speed for Interval	5
Slide Show (Repeat)	Off
Slide Show (Interval)	3 Sec
Image Index	9 Images
Display as Group	Off
Display Rotation	Auto

MENU items	Default setting value
Focus Frame Display	Off
Select Image Jump Dial	Front dial
Image Jump Method	One by one

(Network)

To reset the items for [Network] to the default values, select [Initialize] or [Reset Network Set.]. These items are not reset to the default values even if you select [Camera Settings Reset].

MENU items	Default setting value
Ctrl w/ Smartphone (Ctrl w/ Smartphone)	Off
Ctrl w/ Smartphone (Connection)	—
Ctrl w/ Smartphone (Always Connected)	Off
Send to Smartphone	—
Px Sending Target	Proxy Only
Cnct. during Power OFF	Off
FTP Transfer Func. (FTP Function)	Off
FTP Transfer Func. (FTP Connect Method)	Wi-Fi
FTP Transfer Func. (USB-LAN/Tethering Connect)	—
FTP Transfer Func. (USB-LAN/Tethering Discnct.)	—
FTP Transfer Func. (Server Setting)	Server 1
FTP Transfer Func. (Save/Load FTP Settings)	—
FTP Transfer Func. (when [FTP Transfer] is set to [Target Group])	This Date
FTP Transfer Func. (when [FTP Transfer] is set to [Still Images/Movies])	All
FTP Transfer Func. (when [FTP Transfer] is set to [Target Img (Protect)])	All
FTP Transfer Func. (when [FTP Transfer] is set to [Transfer Status])	All
FTP Transfer Func. (Display FTP Result)	—
FTP Transfer Func. (Auto FTP Transfer)	Off
FTP Transfer Func. (RAW+J/H Transfer Target)	JPEG & HEIF
FTP Transfer Func. (Px Transfer Target)	Proxy Only
FTP Transfer Func. (FTP Power Save)	Off
PC Remote Function (PC Remote)	Off
PC Remote Function (PC Remote Cnct Method)	USB
PC Remote Function (Pairing)	—
PC Remote Function (Wi-Fi Direct Info.)	—
PC Remote Function (Still Img. Save Dest.)	PC Only

MENU items	Default setting value
PC Remote Function (PC Save Image Size)	Original
PC Remote Function (RAW+J PC Save Img)	RAW & JPEG
PC Remote Function (RAW+H PC Save Image)	RAW & HEIF
Bluetooth Rmt Ctrl	Off
Location Info Link	Off
Auto Time Correction (when [Location Info Link] is set to [On])	On
Auto Area Adjustment (when [Location Info Link] is set to [On])	On
WPS Push	—
Access Point Set.	—
Wi-Fi Frequency Band	2.4GHz
Display Wi-Fi Info.	—
SSID/PW Reset	—
Bluetooth Function	Off
Pairing	—
Disp Device Address	—
LAN IP Address Setting	Auto
Display Wired LAN Info.	—
Airplane Mode	Off
Edit Device Name	—
Import Root Certificate	—
Security(IPsec) (IPsec)	Off
Security(IPsec) (Dest. IP Address)	—
Security(IPsec) (Shared Key)	—
Reset Network Set.	—

(Setup)

To reset the items for [Setup] to the default values, select [Initialize]. These items are not reset to the default values even if you select [Camera Settings Reset].

MENU items	Default setting value
Language	—
Area/Date/Time Setting (Area Setting)	—
Area/Date/Time Setting (Daylight Savings)	Off
Area/Date/Time Setting (Date/Time)	—

MENU items	Default setting value
Area/Date/Time Setting (Date Format)	—
Setting Reset	—
Save/Load Settings	—
Custom Key Setting (Control Wheel)	Not set
Custom Key Setting (Custom Button 1)	White Balance
Custom Key Setting (Custom Button 2)	Autofocus Area
Custom Key Setting (Custom Button 3)	Focus Mode
Custom Key Setting (Custom Button 4)	Touch Operation Select
Custom Key Setting (Multi-Slc Center Btn)	Focus Standard
Custom Key Setting (Center Button)	Not set
Custom Key Setting (Left Button)	Drive Mode
Custom Key Setting (Right Button)	ISO
Custom Key Setting (Down Button)	Not set
Custom Key Setting (AEL Button)	AEL hold
Custom Key Setting (AF-ON Button)	AF On
Custom Key Setting (MOVIE Button)	Movie Shooting
Custom Key Setting (Focus Hold Button)	Focus Hold
Custom Key Setting (Control Wheel)	Follow Custom ( )
Custom Key Setting (Custom Button 1)	Follow Custom ( )
Custom Key Setting (Custom Button 2)	Follow Custom ( )
Custom Key Setting (Custom Button 3)	Follow Custom ( )
Custom Key Setting (Custom Button 4)	Follow Custom ( )
Custom Key Setting (Multi-Slc Center Btn)	Follow Custom ( )
Custom Key Setting (Center Button)	Follow Custom ( )
Custom Key Setting (Left Button)	Follow Custom ( )
Custom Key Setting (Right Button)	Follow Custom ( )
Custom Key Setting (Down Button)	Follow Custom ( )
Custom Key Setting (AEL Button)	Follow Custom ( )
Custom Key Setting (AF-ON Button)	Follow Custom ( )
Custom Key Setting (MOVIE Button)	Movie Shooting
Custom Key Setting (Focus Hold Button)	Follow Custom ( )
Custom Key Setting (Custom Button 1)	Follow Custom (/)
Custom Key Setting (Custom Button 2)	Follow Custom (/)

MENU items	Default setting value
Custom Key Setting (Custom Button 3)	Protect
Custom Key Setting (MOVIE Button)	Follow Custom (/)
Custom Key Setting (Fn/ Button)	Send to Smartphone
Fn Menu Settings	—
Different Set for Still/Mv	—
DISP (Screen Disp) Set (Monitor)	Display All Info.
DISP (Screen Disp) Set (Finder)	Level
REC w/ Shutter	Off
Zoom Ring Rotate	Left(W)/Right(T)
My Dial Settings	—
Dial Setup	Av Tv
Av/Tv Rotate	Normal
Dial Ev Comp	Off
Function Ring(Lens)	Power Focus
Lock Operation Parts	Off
Touch Operation	On
Touch Sensitivity	Standard
Touch Panel/Pad	Touch Panel Only
Touch Pad Settings (Operation in Vertical Orientation)	On
Touch Pad Settings (Touch Position Mode)	Absolute Position
Touch Pad Settings (Operation Area)	Right 1/2
Touch Func. in Shooting	Touch Tracking
Select Finder/Monitor	Auto
Monitor Brightness	±0
Viewfinder Bright.	Auto
Finder Color Temp.	±0
Viewfinder Magnifi.	Standard
Display Quality	Standard
Finder Frame Rate	Standard
TC/UB Disp. Setting	Counter
Gamma Display Assist	Off
Gamma Disp. Assist Typ.	Auto
Remain Shoot Display	Not Displayed

MENU items	Default setting value
Auto Review	Off
Power Save Start Time	1 Min
Auto Power OFF Temp.	Standard
Volume Settings	7
4ch Audio Monitoring	CH1/CH2
Audio signals	On
USB Connection	Auto
USB LUN Setting	Multi
USB Power Supply	On
HDMI Resolution	Auto
HDMI Output Settings (Rec. Media dur HDMI Output)	On
HDMI Output Settings (Output Resolution)	Auto
HDMI Output Settings (4K Output Set.(HDMI Only))	60p 10bit/50p 10bit
HDMI Output Settings (RAW Output)	Off
HDMI Output Settings (RAW Output Setting)	60p/50p
HDMI Output Settings (Color Gamut for RAW Output)	S-Gamut3.Cine/S-log3
HDMI Output Settings (Time Code Output)	Off
HDMI Output Settings (REC Control)	Off
HDMI Output Settings (4ch Audio Output)	CH1/CH2
HDMI Info. Display	On
CTRL FOR HDMI	On
Video Light Mode	Power Link
IR Remote Ctrl	Off
Sensor Cleaning	—
Auto Pixel Mapping	On
Pixel Mapping	—
Version	—

☆ (My Menu)

To reset the items for [My Menu] to the default values, select [Initialize] or [Delete All]. These items are not reset to the default values even if you select [Camera Settings Reset].

MENU items	Default setting value
Add Item	—
Sort Item	—

MENU items	Default setting value
Delete Item	—
Delete Page	—
Delete All	—
Display From My Menu	Off

5-021-326-12(1) Copyright 2020 Sony Corporation

Interchangeable Lens Digital Camera
ILCE-7SM3 α7SIII

Specifications

Camera

[System]

Camera Type
Interchangeable Lens Digital Camera

Lens
Sony E-mount lens

[Image sensor]

Image format
35 mm full frame (35.6 mm × 23.8 mm), CMOS image sensor

Effective pixel number of camera
Approx. 12 100 000 pixels

Total pixel number of camera
Approx. 12 900 000 pixels

[SteadyShot]

System
In-camera sensor shift image stabilization system

[Anti-Dust]

System
Anti-dust function based on antistatic coating and ultrasonic vibration

[Auto focus system]

Detection system
Phase-detection system/Contrast detection system

Sensitivity Range
–6 EV to +20 EV (at ISO 100 equivalent, F2.0)

AF illuminator
Approx. 0.3 m to 3.0 m (When using an FE 28-70 mm F3.5-5.6 OSS)

[Electronic Viewfinder]

Type
1.6 cm (0.64 type) Electronic Viewfinder

Total number of dots
9 437 184 dots

Frame coverage
100%

Magnification
Approx. 0.90× with 50 mm lens at infinity, –1 m^{-1}

Eye Point

Approx. 25 mm from the eyepiece and approx. 21 mm from the eyepiece frame at –1 m^{-1}

Diopter Adjustment

$-4.0\ m^{-1}$ to $+3.0\ m^{-1}$

[Monitor]

LCD monitor

7.5 cm (3.0 type) TFT drive, touch panel

Total number of dots

1 440 000 dots

[Exposure control]

Metering method

1 200-zone evaluative metering

Metering Range

–3 EV to +20 EV (at ISO 100 equivalent with F2.0 lens)

ISO sensitivity (Recommended exposure index)

Still images: ISO 80 to ISO 102 400 (Extended ISO: Minimum ISO 40, maximum ISO 409 600)
Movies: equivalent to ISO 80 through ISO 102 400 (Extended ISO: maximum equivalent to ISO 409 600)

Exposure compensation

±5.0 EV (switchable between 1/3 EV and 1/2 EV steps)

When using exposure compensation dial: ±3.0 EV (1/3 EV step)

[Shutter]

Type

Electronically-controlled, vertical-traverse, focal-plane type

Speed range

Still images: 1/8 000 second to 30 seconds, BULB
Movies: 1/8 000 second to 1/4 second (1/3 EV step)
60p-compatible devices: up to 1/60 second in AUTO mode (up to 1/30 second in Auto slow shutter mode)
50p-compatible devices: up to 1/50 second in AUTO mode (up to 1/25 second in Auto slow shutter mode)

Flash sync speed

1/250 second (when using a flash manufactured by Sony)

[Continuous shooting]

Continuous shooting speed

(Continuous Shooting: Hi+) : Maximum of approx. 10 images per second/ (Continuous Shooting: Hi): Maximum of approx. 8 images per second/ (Continuous Shooting: Mid): Maximum of approx. 6 images per second/ (Continuous Shooting: Lo): Maximum of approx. 3 images per second

- Based on our measurement conditions. The speed of continuous shooting can be slower, depending on the shooting conditions.

[Recording format]

File format

JPEG (compliant with DCF Ver. 2.0, Exif Ver. 2.32, and MPF Baseline), HEIF (MPEG-A MIAF compliant), RAW (Sony ARW 4.0 format compliant)

Movie (XAVC HS format)

XAVC Ver2.0: MP4 format compliant

Video: MPEG-H HEVC/H.265

Audio: LPCM 2ch (48 kHz 16 bit), LPCM 4ch (48kHz 24bit)[*1], LPCM 2ch (48kHz 24bit)[*1], MPEG-4 AAC-LC 2ch[*2]

Movie (XAVC S format)

XAVC Ver2.0: MP4 format compliant

Video: MPEG-4 AVC/H.264

Audio: LPCM 2ch (48 kHz 16 bit), LPCM 4ch (48kHz 24bit)*1, LPCM 2ch (48kHz 24bit)*1, MPEG-4 AAC-LC 2ch*2

*1 When using accessories that can support 4ch output and 24 bits with the multi-interface shoe

*2 Proxy movies

[Recording media]

CFexpress Type A memory cards, SD cards

[Slot]

SLOT 1/SLOT 2

Slot for CFexpress Type A memory cards, SD cards (UHS-I and UHS-II compatible)

Supports operations between two memory cards.

[Input/output terminals]

USB Type-C terminal

SuperSpeed USB 5 Gbps (USB 3.2)

Compatible with USB Power Delivery

Multi/Micro USB Terminal*

Hi-Speed USB (USB 2.0)

* Supports Micro USB compatible devices.

HDMI

HDMI type A jack

(Microphone) terminal

Ø 3.5 mm Stereo mini jack

(Headphones) terminal

Ø 3.5 mm Stereo mini jack

[Power, general]

Rated input

7.2 V ⎓

Power consumption

Using an FE 28-70 mm F3.5-5.6 OSS

When using the viewfinder: Approx. 4.3 W (while shooting still images)/approx. 7.6 W (while shooting movies)

When using the monitor: Approx. 3.3 W (while shooting still images)/approx. 7.3 W (while shooting movies)

Operating temperature

0 to 40°C (32 to 104°F)

Storage temperature

–20 to 55°C (–4 to 131°F)

Dimensions (W/H/D) (Approx.)

128.9 × 96.9 × 80.8 mm

128.9 × 96.9 × 69.7 mm (from grip to monitor)

5 1/8 × 3 7/8 × 3 1/4 in.

5 1/8 × 3 7/8 × 2 3/4 in. (from grip to monitor)

Mass (Approx.)

699 g (1 lb 8.7 oz) (including battery pack, SDXC memory card)

Microphone

Stereo

Speaker

Monaural

Exif Print

Compatible

PRINT Image Matching III

Compatible

[Wireless LAN]

WW271448 (see name plate on the bottom of camera)

Supported format

IEEE 802.11 a/b/g/n/ac

Frequency band

2.4 GHz / 5 GHz

Security

WEP/WPA-PSK/WPA2-PSK

Connection method

Wi-Fi Protected Setup™ (WPS)/Manual

Access method

Infrastructure mode

WW389565 (see name plate on the bottom of camera)

Supported format

IEEE 802.11 b/g/n

Frequency band

2.4 GHz

Security

WEP/WPA-PSK/WPA2-PSK

Connection method

Wi-Fi Protected Setup™ (WPS)/Manual

Access method

Infrastructure mode

[NFC]

Tag type

NFC Forum Type 3 Tag compliant

[Bluetooth communications]

Bluetooth standard Ver. 5.0

Frequency band

2.4 GHz

Battery charger BC-QZ1

Rated input

100 – 240 V ~ , 50/60 Hz, 0.38 A

Rated output

8.4 V ⎓ , 1.6 A

Rechargeable battery pack NP-FZ100

Rated voltage

7.2 V ⎓

Design and specifications are subject to change without notice.

5-021-326-12(1) Copyright 2020 Sony Corporation

Interchangeable Lens Digital Camera
ILCE-7SM3 α7SIII

Trademarks

- XAVC S and XAVC S are registered trademarks of Sony Corporation.
- XAVC HS and XAVC HS are registered trademarks of Sony Corporation.
- Mac is a trademark of Apple Inc., registered in the United States and other countries.
- iPhone and iPad are trademarks of Apple Inc., registered in the U.S. and other countries.
- USB Type-C® and USB-C® are registered trademarks of USB Implementers Forum.
- The terms HDMI, HDMI High-Definition Multimedia Interface, and the HDMI Logo are trademarks or registered trademarks of HDMI Licensing Administrator, Inc.
- Microsoft and Windows are registered trademarks or trademarks of Microsoft Corporation in the United States and/or other countries.
- SDXC logo is a trademark of SD-3C, LLC.
- The CFexpress Type A logo is a trademark licensed by the CompactFlash Association.
- Android and Google Play are trademarks or registered trademarks of Google LLC.
- Wi-Fi, the Wi-Fi logo and Wi-Fi Protected Setup are registered trademarks or trademarks of the Wi-Fi Alliance.
- The N-Mark is a trademark or registered trademark of NFC Forum, Inc. in the United States and in other countries.
- The Bluetooth® word mark and logos are registered trademarks owned by the Bluetooth SIG, Inc. and any use of such marks by Sony Corporation is under license.
- QR Code is a trademark of Denso Wave Inc.
- In addition, system and product names used in this manual are, in general, trademarks or registered trademarks of their respective developers or manufacturers. However, the ™ or ® marks may not be used in all cases in this manual.

5-021-326-12(1) Copyright 2020 Sony Corporation

License

Notes on the License

This product comes with software that are used based on licensing agreements with the owners of that software. Based on requests by the owners of copyright of these software applications, we have an obligation to inform you of the following. Licenses (in English) are recorded in the internal memory of your product. Establish a Mass Storage connection between the product and a computer to read licenses in the “PMHOME” - “LICENSE” folder. However, please note that Android products may be unable to access the “PMHOME” - “LICENSE” folder on this product. In this case, a message such as “Unsupported Sony USB drive” may be displayed by the Android product. It is therefore recommended that you use a device other than an Android product to read the licenses.

THIS PRODUCT IS LICENSED UNDER THE AVC PATENT PORTFOLIO LICENSE FOR THE PERSONAL USE OF A CONSUMER OR OTHER USES IN WHICH IT DOES NOT RECEIVE REMUNERATION TO
(i) ENCODE VIDEO IN COMPLIANCE WITH THE AVC STANDARD (“AVC VIDEO”)
AND/OR
(ii) DECODE AVC VIDEO THAT WAS ENCODED BY A CONSUMER ENGAGED IN A PERSONAL ACTIVITY AND/OR WAS OBTAINED FROM A VIDEO PROVIDER LICENSED TO PROVIDE AVC VIDEO.
NO LICENSE IS GRANTED OR SHALL BE IMPLIED FOR ANY OTHER USE. ADDITIONAL INFORMATION INCLUDING THAT RELATING TO PROMOTIONAL, INTERNAL AND COMMERCIAL USES AND LICENSING MAY BE OBTAINED FROM MPEG LA, L.L.C.
SEE HTTPS://WWW.MPEGLA.COM

On GNU GPL/LGPL applied software

The software that is eligible for the following GNU General Public License (hereinafter referred to as “GPL”) or GNU Lesser General Public License (hereinafter referred to as “LGPL”) are included in the product.
This informs you that you have a right to have access to, modify, and redistribute source code for these software programs under the conditions of the supplied GPL/LGPL.
Source code is provided on the web.
Use the following URL to download it.
https://oss.sony.net/Products/Linux/
We would prefer you do not contact us about the contents of source code.

5-021-326-12(1) Copyright 2020 Sony Corporation

Interchangeable Lens Digital Camera
ILCE-7SM3 α7SIII

Troubleshooting

If you experience trouble with the product, try the following solutions.

1. **Remove the battery pack, wait for about one minute, re-insert the battery pack, then turn on the power.**
2. **Initialize the settings.**
3. **Consult your dealer or local authorized service facility. Additional information on this product and answers to frequently asked questions can be found at our Customer Support Website.**
   https://www.sony.net/

Related Topic

- Setting Reset

5-021-326-12(1) Copyright 2020 Sony Corporation

Warning messages

Set Area/Date/Time.

- Set the area, date and time. If you have not used the product for a long time, charge the internal rechargeable backup battery.

Power insufficient.

- The image copying or the image sensor cleaning function will not operate because the remaining battery level is too low. Recharge the battery pack or supply power by connecting the camera with a computer, etc.

Unable to use memory card. Format?

- The memory card was formatted on a computer and the file format was modified. Select [Enter] and then format the memory card. You can use the memory card again, however, all previous data in the memory card is erased. It may take some time to complete the format. If the message still appears, change the memory card.

Memory Card Error

- An incompatible memory card is inserted.
- Formatting has failed. Format the memory card again.

Unable to read memory card. Reinsert memory card.

- An incompatible memory card is inserted.
- The memory card is damaged.
- The terminal section of the memory card is dirty.

Memory card locked.

- You are using a memory card with a write-protect switch or a delete-protect switch with the switch set to the LOCK position. Set the switch to the record position.

Cannot open the shutter since the memory card is not inserted.

- No memory card has been inserted into the memory card slot selected in [Prioritize Rec. Media].
- To release the shutter without inserting a memory card into the camera, set [Release w/o Card] to [Enable]. In this case, images will not be saved.

This memory card may not be capable of recording and playing normally.

- An incompatible memory card is inserted.

Processing...

- When performing noise reduction, the reduction process takes place. You cannot do any further shooting during this reduction process.

Unable to display.

- Images recorded with other products or images modified with a computer may not be displayed.
- Processing on the computer such as deletion of the image files may cause inconsistencies in the image database files. Repair the image database files.

Check that a lens is mounted. For an unsupported lens, set "Release w/o Lens" in the menu to "Enable".

- The lens is not attached properly, or the lens is not attached. If the message appears when a lens is attached, reattach the lens. If the message appears frequently, check whether the contacts of the lens and product are clean or not.
- When attaching the product to an astronomical telescope or similar instrument, or using an unsupported lens, set [Release w/o Lens] to [Enable].

Internal temp. high. Allow it to cool.

- The product has become hot because you have been shooting continuously. Turn the power off and cool the product and wait until the product is ready to shoot again.

(Overheating warning)

- You have been recording images for a long time, the product temperature has risen.

(Database file error)

- The number of images exceeds that for which date management in a database file by the product is possible.

(Database file error)

- Unable to register to the database file. Import all the images to a computer and recover the memory card.

Image DataBase File error

- There is something wrong in the Image Database File. Select MENU → (Shooting) → [Media] → [Recover Image DB].

System Error
Camera Error. Turn power off then on.

- Remove the battery pack, and then re-insert it. If the message appears frequently, consult local authorized Sony service facility.

Image Database File error. Recover?

- You cannot record and play back a movie because the Image Database File is damaged. Recover the Image Database File following the on-screen instructions.

Unable to magnify.
Unable to rotate image.

- Images recorded with other products may not be enlarged or rotated.

Cannot create more folders.

- A folder in the memory card has the first three digits “999.” You cannot create any more folders on this camera.

Related Topic

- Notes on memory card
- Area/Date/Time Setting
- Format
- Rec. Media Settings (still image/movie): Prioritize Rec. Media
- Release w/o Card
- Release w/o Lens (still image/movie)

- Recover Image DB (still image/movie)

5-021-326-12(1) Copyright 2020 Sony Corporation

Interchangeable Lens Digital Camera
ILCE-7SM3 α7SIII

Recommended pages

- **File Format (movie)**
  You can select the movie file format.

- **Recordable movie times**
  Refer to this topic for the shooting duration of movies recordable on the memory card.

- **JPEG/HEIF Switch**
  Switches the file format (JPEG/HEIF) of the still image to be recorded.

- **FTP Help Guide**
  Refer to the “FTP Help Guide” when you want to transfer images to an FTP server.

- **ILCE-7SM3 support information**
  This website provides basic information about the camera and information regarding compatible lenses and accessories. (Another window will open.)

5-021-326-12(1) Copyright 2020 Sony Corporation